IGNITION SYSTEM

CONTENTS

page

GENERAL INFORMATION
INTRODUCTION 2
DESCRIPTION AND OPERATION
AUTOMATIC SHUTDOWN RELAY 5
CAMSHAFT POSITION SENSOR—2.4L 7
CAMSHAFT POSITION SENSOR—2.5L 8
CRANKSHAFT POSITION SENSOR 5
CRANKSHAFT POSITION SENSOR—2.5L 6
ELECTRONIC IGNITION COIL 4
ENGINE COOLANT TEMPERATURE SENSOR . . 8
IGNITION COIL—2.5L 4
IGNITION INTERLOCK 9
IGNITION SYSTEM 2
INTAKE AIR TEMPERATURE SENSOR—2.4/2.5L 8
KNOCK SENSOR 8
LOCK KEY CYLINDER 9
MANIFOLD ABSOLUTE PRESSURE (MAP) SENSOR 9
POWERTRAIN CONTROL MODULE (PCM) 2
SPARK PLUG CABLES 3
SPARK PLUGS—2.4L 2
SPARK PLUGS—2.5L 3
THROTTLE POSITION SENSOR (TPS) 9
DIAGNOSIS AND TESTING
CAMSHAFT POSITION SENSOR AND CRANKSHAFT POSITION SENSOR 12
CHECK COIL TEST—2.4L 10
CHECK COIL TEST—2.5L 11
DISTRIBUTOR CAP RESISTANCE TEST—2.5L . . . 12
ENGINE COOLANT TEMPERATURE SENSOR . 12
FAILURE TO START TEST—2.0/2.4L 11
FAILURE TO START TEST—2.5L 12
IGNITION TIMING PROCEDURE 12
INTAKE AIR TEMPERATURE SENSOR 12
MANIFOLD ABSOLUTE PRESSURE (MAP) SENSOR TEST 12
SPARK PLUG CONDITION 13
TESTING FOR SPARK AT COIL—2.4L 9
TESTING FOR SPARK AT COIL—2.5L 10
THROTTLE POSITION SENSOR 12
REMOVAL AND INSTALLATION
AUTOMATIC SHUTDOWN RELAY 18
CAMSHAFT POSITION SENSOR—DOHC 19
CRANKSHAFT POSITION SENSOR—2.4 L . . . 19
CRANKSHAFT POSITION SENSOR—2.5L 20
DISTRIBUTOR CAP—2.5L 21
DISTRIBUTOR ROTOR—2.5L 21
DISTRIBUTOR—2.5L 20
ENGINE COOLANT TEMPERATURE SENSOR—2.5L 22
IGNITION COIL—2.4L 18
IGNITION COIL—2.5L 18
IGNITION INTERLOCK 26
IGNITION SWITCH 23
INTAKE AIR TEMPERATURE SENSOR 22
LOCK CYLINDER HOUSING 26
LOCK KEY CYLINDER 26
MANIFOLD ABSOLUTE PRESSURE (MAP) SENSOR—2.4L 22
MANIFOLD ABSOLUTE PRESSURE (MAP) SENSOR—2.5L 23
POWERTRAIN CONTROL MODULE 15
SPARK PLUG CABLES—2.4L 15
SPARK PLUG TUBES 18
SPARK PLUGS AND CABLES—2.5L 16
SPARK PLUG—2.4L 16
THROTTLE POSITION SENSOR 23
SPECIFICATIONS
FIRING ORDER 27
IGNITION COILS 28
SPARK PLUG CABLE RESISTANCE—2.4L 28
SPARK PLUG CABLE RESISTANCE—2.5L 28
SPARK PLUGS 28
TORQUE SPECIFICATION 27
VECI LABEL 27

GENERAL INFORMATION

INTRODUCTION

This group describes the ignition systems for the 2.4 and 2.5L engines.

On Board Diagnostics is described in Group 25 - Emission Control Systems.

Group 0 - Lubrication and Maintenance, contains general maintenance information for ignition related items. The Owner's Manual also contains maintenance information.

DESCRIPTION AND OPERATION

IGNITION SYSTEM

NOTE: The 2.4 and 2.5L engines use a fixed ignition timing system. Basic ignition timing is not adjustable. All spark advance is determined by the Powertrain Control Module (PCM).

The distributorless ignition system used on 2.4L engines is refered to as the Direct Ignition System (DIS). **Basic ignition timing is not adjustable.** The system's three main components are the coil pack, crankshaft position sensor, and camshaft position sensor.

The crankshaft position sensor and camshaft position sensor are hall effect devices. The camshaft position sensor and crankshaft position sensor generate pulses that are inputs to the PCM. The PCM determines crankshaft position from these sensors. The PCM calculates injector sequence and ignition timing from crankshaft position. For a description of both sensors, refer to Camshaft Position Sensor and Crankshaft Position Sensor in this section.

The 2.5L engine uses a distributor, crankshaft sensor and ignition coil. **Basic ignition timing is not adjustable.** The system's main components are the distributor, distributor pickup, camshaft signal, crankshaft signal and ignition coil.

The crankshaft position sensor and camshaft position sensor are hall effect devices. The camshaft position sensor and crankshaft position sensor generate pulses that are inputs to the PCM. The PCM determines crankshaft position from these sensors. The PCM calculates injector sequence and ignition timing from crankshaft position. For a description of both sensors, refer to Camshaft Position Sensor and Crankshaft Position Sensor in this section.

POWERTRAIN CONTROL MODULE (PCM)

The PCM regulates the ignition system (Fig. 1). The PCM supplies battery voltage to the ignition coil through the Auto Shutdown (ASD) Relay. The PCM also controls the ground circuit for the ignition coil (2.4L). By switching the ground path for the coil on and off, the PCM adjusts ignition timing to meet changing engine operating conditions.

On a 2.5L The PCM controls ignition timing by turning on and off a tranisistor in the distributor. Refer to 2.5L Ignition Coil in this Group for more information.

During the crank-start period the PCM maintains spark advance at 9° BTDC. During engine operation the following inputs determine the amount of spark advance provided by the PCM.

- Intake air temperature
- Coolant temperature
- Engine RPM
- Intake manifold vacuum
- Knock sensor (2.4L Engines)

The PCM also regulates the fuel injection system. Refer to the Fuel Injection sections of Group 14.

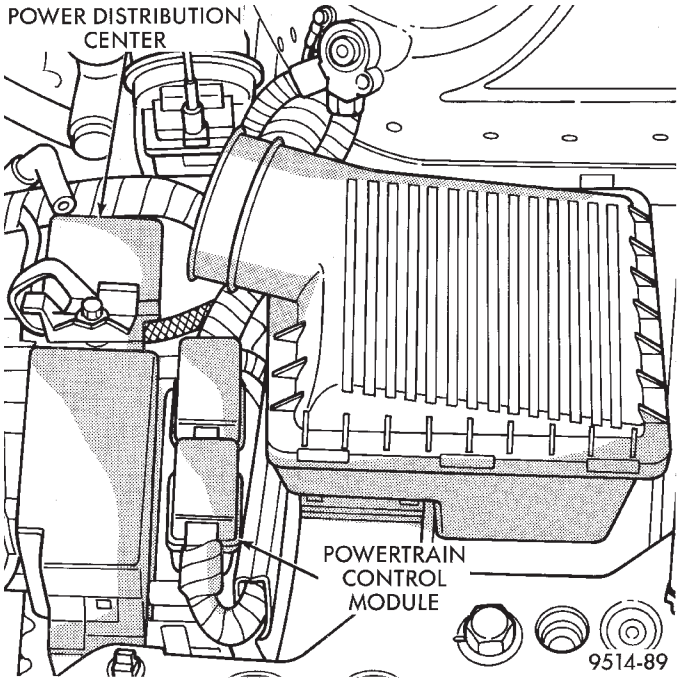

Fig. 1 Powertrain Control Module

SPARK PLUGS—2.4L

All engines use resistor spark plugs. They have resistance values ranging from 6,000 to 20,000 ohms when checked with at least a 1000 volt spark plug tester.

Do not use an ohm meter to check the resistance of the spark plugs. This will give an inaccurate reading.

Remove the spark plugs and examine them for burned electrodes and fouled, cracked or broken porcelain insulators. Keep plugs arranged in the order in which they were removed from the engine. An isolated plug displaying an abnormal condition indicates that a problem exists in the corresponding cylinder.

DESCRIPTION AND OPERATION (Continued)

Replace spark plugs at the intervals recommended in Group O - Lubrication and Maintenance.

Spark plugs that have low mileage may be cleaned and reused if not otherwise defective, carbon or oil fouled. Refer to the Spark Plug Condition section of this group. After cleaning, file the center electrode flat with a small flat point file or jewelers file. Adjust the gap between the electrodes (Fig. 3) to the dimensions specified in the chart at the end of this section.

Special care should be used when installing spark plugs in the 2.4L cylinder head spark plug wells. Be sure the plugs do not drop into the wells, damage to the electrodes can occur.

Always tighten spark plugs to the specified torque. Over tightening can cause distortion resulting in a change in the spark plug gap. Overtightening can also damage the cylinder head. Tighten spark plugs to 28 N·m (20 ft. lbs.) torque.

SPARK PLUGS—2.5L

The 2.5L engines utilize platinum spark plugs. Refer to the maintenance schedule in Group 0 of this service manual.

All engines use resistor spark plugs. They have resistance values ranging from 6,000 to 20,000 ohms when checked with at least a 1000 volt spark plug tester.

Do not use an ohm meter to check the resistance of the spark plugs. This will give an inaccurate reading.

Remove the spark plugs and examine them for burned electrodes and fouled, cracked or broken porcelain insulators. Keep plugs arranged in the order in which they were removed from the engine. An isolated plug displaying an abnormal condition indicates that a problem exists in the corresponding cylinder. Replace spark plugs at the intervals recommended in Group O - Lubrication and Maintenance.

Spark plugs that have low mileage may be cleaned and reused if not otherwise defective, carbon or oil fouled. Refer to the Spark Plug Condition section of this group.

The spark plugs are double platinum and have a recommended service life of 100,000 miles for normal driving conditions per schedule A in this manual. The spark plugs have a recommended service life of 75,000 miles for serve driving conditions per schedule B in this manual. A thin platinum pad is welded to both electrode ends as show in (Fig. 2). Extreme care must be used to prevent spark plug cross threading, mis-gaping and ceramic insulator damage during plug removal and installation.

CAUTION: Never attempt to file the electrodes or use a wire brush for cleaning platinum plugs. This would damage the platinum pads which would shorten spark plug life.

Apply a very small amount of anti-seize compound to the threads when reinstalling the vehicle's original spark plugs that have been determined good. **Do not apply anti-seize compound to new spark plugs.**

NOTE: Anti-seize compound is electrically conductive and can cause engine misfires if not applied correctly. It is extremely important that the anti-seize compound doesn't make contact with the spark plug electrodes or ceramic insulator.

Never force a gap gauge between the platinum electrodes or adjust the gap on platinum spark plugs without reading the 2.5L Spark Plug Gap Measurement procedures in this section.

Always tighten spark plugs to the specified torque. Over tightening can cause distortion resulting in a change in the spark plug gap. Overtightening can also damage the cylinder head. Tighten spark plugs to 28 N·m (20 ft. lbs.) torque.

Due to the engine packaging environment for the 2.5L engines, extreme care should be used when installing the spark plugs to avoid cross threading problems.

2.5L SPARK PLUG GAP MEASUREMENT

CAUTION: The Platinum pads can be damaged during the measurement of checking the gap if extreme care is not used.

- **Use only a taper gap gauge** (Fig. 3)
- Never force the gap gauge through the platinum pads. Only apply enough force until resistance is felt.
- Never use a wire brush or spark plug cleaner machine to clean platinum spark plugs
- Use an OSHA approved air nozzle when drying gas fouled spark plugs.

If gap adjustment is required of platinum plug, bend only the ground electrode. DO NOT TOUCH the platinum pads. Use only a proper gapping tool and check with a taper gap gauge.

CAUTION: Cleaning of the platinum plug may damage the platinum tip.

SPARK PLUG CABLES

Spark Plug cables are sometimes referred to as secondary ignition wires. They transfer electrical current from the distributor (2.5L), coil pack (2.0/2.4L), to individual spark plugs at each cylinder. The resistor type, nonmetallic spark plug cables provide suppression of radio frequency emissions from the ignition system.

Check the spark plug cable connections for good contact at the coil and distributor cap towers and at the spark plugs. Terminals should be fully seated.

DESCRIPTION AND OPERATION (Continued)

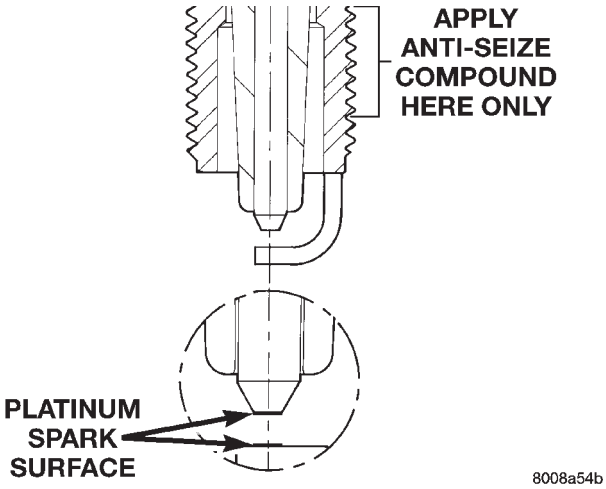

Fig. 2 Platinum Pads

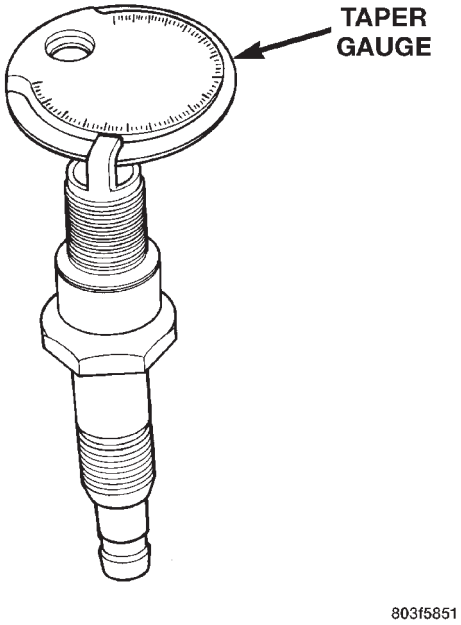

Fig. 3 Setting Spark Plug Electrode Gap

The nipples and spark plug covers should be in good condition. Nipples should fit tightly on the coil and distributor cap towers and spark plug cover should fit tight around spark plug insulators. Loose cable connections can cause ignition malfunctions by permitting water to enter the towers, corroding, and increasing resistance. **To maintain proper sealing at the terminal connections, the connections should not be broken unless testing indicates high resistance, an open circuit or other damage.**

Clean high tension cables with a cloth moistened with a non-flammable solvent and wipe dry. Check for brittle or cracked insulation.

ELECTRONIC IGNITION COIL

WARNING: THE DIRECT IGNITION SYSTEM GENERATES APPROXIMATELY 40,000 VOLTS. PERSONAL INJURY COULD RESULT FROM CONTACT WITH THIS SYSTEM.

The coil pack consists of 2 coils molded together. The coil pack is mounted on the valve cover (Fig. 4). High tension leads route to each cylinder from the coil. The coil fires two spark plugs every power stroke. One plug is the cylinder under compression, the other cylinder fires on the exhaust stroke. Coil number one fires cylinders 1 and 4. Coil number two fires cylinders 2 and 3. The PCM determines which of the coils to charge and fire at the correct time.

The Auto Shutdown (ASD) relay provides battery voltage to the ignition coil. The PCM provides a ground contact (circuit) for energizing the coil. When the PCM breaks the contact, the energy in the coil primary transfers to the secondary causing the spark. The PCM will de-energize the ASD relay if it does not receive the crankshaft position sensor and camshaft position sensor inputs. Refer to Auto Shutdown (ASD) Relay—PCM Output, in this section for relay operation.

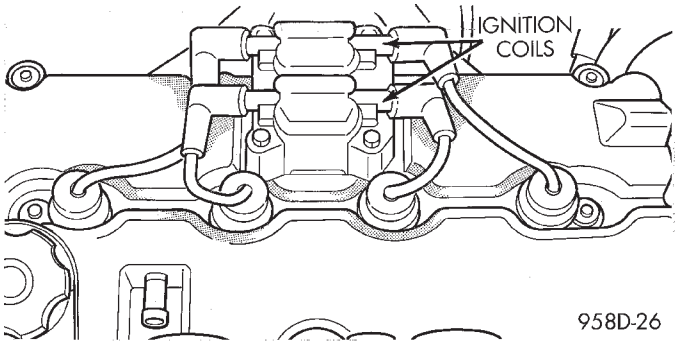

Fig. 4 Ignition Coil Pack—2.4L Engine

IGNITION COIL—2.5L

The 2.5L engine uses an epoxy type coil. The coils are not oil filled. The windings are embedded in a heat and vibration resistant epoxy compound.

On a 2.5L the ignition transistor is located in the distributor (pin 11). On a 2.5L The PCM controls ignition timing by turning on and off the tranisistor in the distributor. By switching the ground path for the coil on and off, the PCM adjusts ignition timing to meet changing engine operating conditions.

The PCM operates the ignition coil through the Auto Shutdown (ASD) relay. When the relay is energized by the PCM, battery voltage is connected to the ignition coil positive terminal. The PCM will de-energize the ASD relay if it does not receive an input from the distributor pick-up. Refer to Auto Shutdown (ASD) Relay and Fuel Pump Relay in this section.

DESCRIPTION AND OPERATION (Continued)

The ignition coil is located inside the distibutor. The distributor is mounted to the right end of the engine block behind the thermostat housing (Fig. 5).

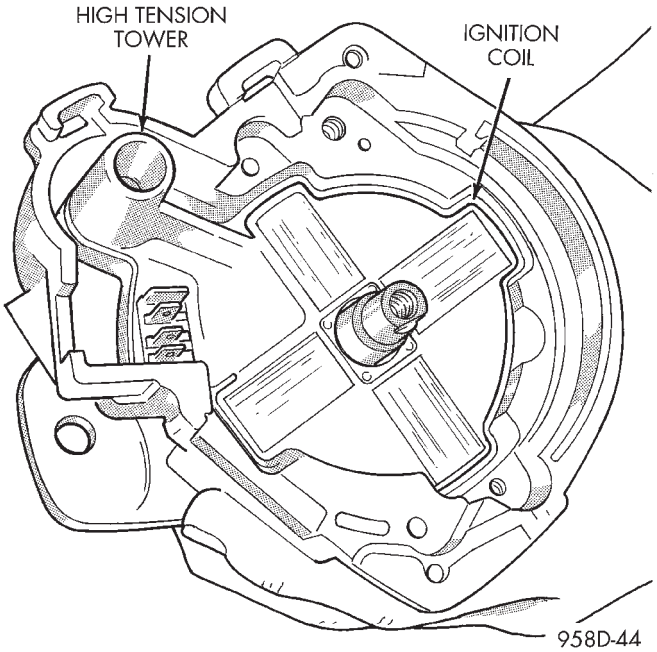

Fig. 5 Ignition Coil—2.5L Engine

AUTOMATIC SHUTDOWN RELAY

The Automatic Shutdown (ASD) relay supplies battery voltage to the fuel injectors, generator field, electronic ignition coil and the heating elements in the oxygen sensors.

Refer to Group 8W, Wiring Diagrams for circuit information.

The PCM controls the ASD relay by switching the ground path for the solenoid side of the relay on and off. The PCM turns the ground path off when the ignition switch is in the Off position unless the O2 Heater Monitor test is being run. Refer to Group 25, On-Board Diagnostics. When the ignition switch is in On or Start, the PCM momentarily turns on the ASD relay. While the relay is on the PCM monitors the crankshaft and camshaft position sensor signals to determine engine speed and ignition timing (coil dwell). If the PCM does not receive crankshaft and camshaft position sensor signals when the ignition switch is in the Run position, it will de-energize the ASD relay.

The ASD relay is located in the PDC (Fig. 6). The inside top of the PDC cover has a label showing relay and fuse identification.

CRANKSHAFT POSITION SENSOR

The PCM determines what cylinder to fire from the crankshaft position sensor input and the camshaft position sensor input. The second crankshaft counter-

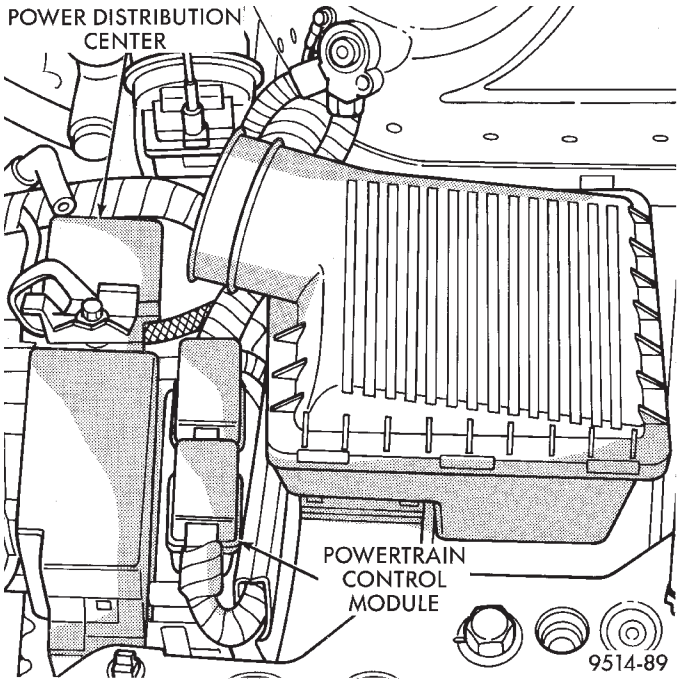

Fig. 6 Power Distribution Center (PDC)

weight has machined into it two sets of four timing reference notches including a 60 degree signature notch (Fig. 7). From the crankshaft position sensor input the PCM determines engine speed and crankshaft angle (position).

The notches generate pulses from high to low in the crankshaft position sensor output voltage. When a metal portion of the counterweight aligns with the crankshaft position sensor, the sensor output voltage goes low (less than 0.5 volts). When a notch aligns with the sensor, voltage goes high (5.0 volts). As a group of notches pass under the sensor, the output voltage switches from low (metal) to high (notch) then back to low.

If available, an oscilloscope can display the square wave patterns of each voltage pulse. From the frequency of the output voltage pulses, the PCM calculates engine speed. The width of the pulses represent the amount of time the output voltage stays high before switching back to low. The period of time the sensor output voltage stays high before switching back to low is referred to as pulse-width. The faster the engine is operating, the smaller the pulse-width on the oscilloscope.

By counting the pulses and referencing the pulse from the 60 degree signature notch, the PCM calculates crankshaft angle (position). In each group of timing reference notches, the first notch represents 69 degrees before top dead center (BTDC). The second notch represents 49 degrees BTDC. The third notch represents 29 degrees. The last notch in each set represents 9 degrees before top dead center BTDC.

DESCRIPTION AND OPERATION (Continued)

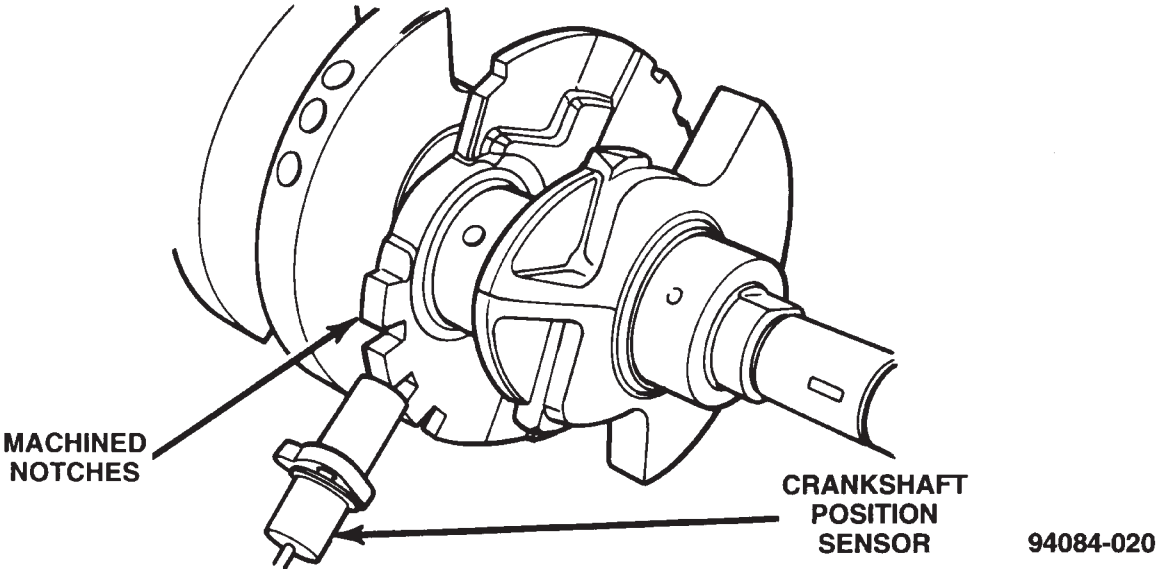

Fig. 7 Timing Reference Notches

The timing reference notches are machined at 20° increments. From the voltage pulse-width the PCM tells the difference between the timing reference notches and the 60 degree signature notch. The 60 degree signature notch produces a longer pulse-width than the smaller timing reference notches. If the camshaft position sensor input switches from high to low when the 60 degree signature notch passes under the crankshaft position sensor, the PCM knows cylinder number one is the next cylinder at TDC.

The crankshaft position sensor mounts to the engine block behind the generator, just above the oil filter (Fig. 8).

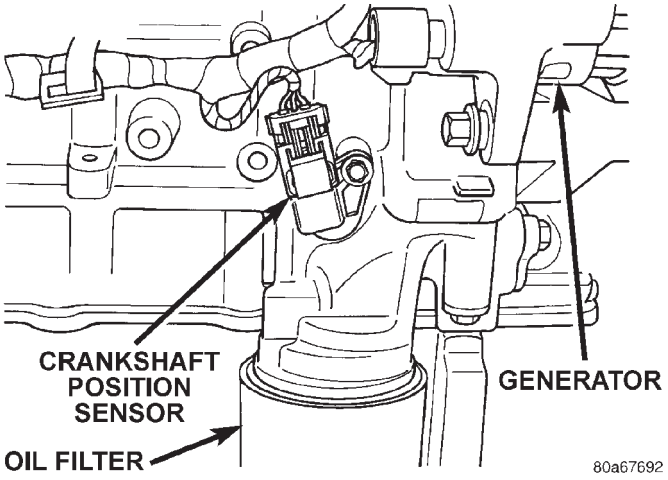

Fig. 8 Crankshaft Position Sensor

CRANKSHAFT POSITION SENSOR—2.5L

The crankshaft position sensor (Fig. 9) detects slots cut into the transmission driveplate extension. There are 3 sets of slots. Each set contains 4 slots, for a total of 12 slots (Fig. 10). Basic timing is set by the position of the last slot in each group. Once the Powertrain Control Module (PCM) senses the last slot, it determines crankshaft position (which piston will next be at TDC) from the camshaft position sensor input. The 4 pulses generated by the crankshaft position sensor represent the 69°, 49°, 29°, and 9° BTDC marks. It may take the PCM one engine revolution to determine crankshaft position.

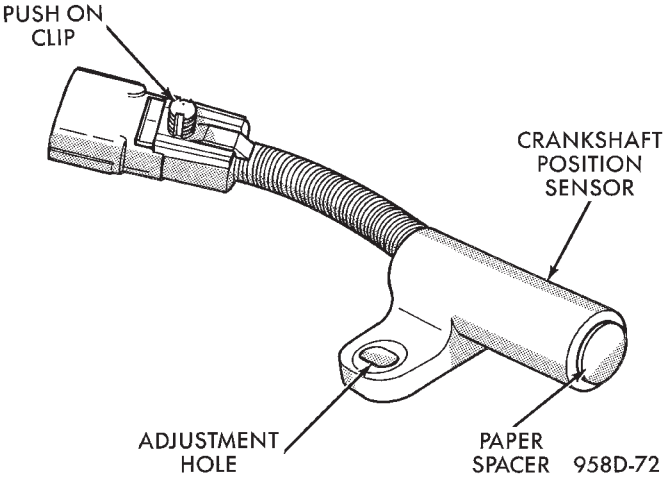

Fig. 9 Crankshaft Position Sensor—Adjustable

The PCM uses crankshaft position reference to determine injector sequence, ignition timing and the presence of misfire. Once the PCM determines crankshaft position, it begins energizing the injectors in sequence.

DESCRIPTION AND OPERATION (Continued)

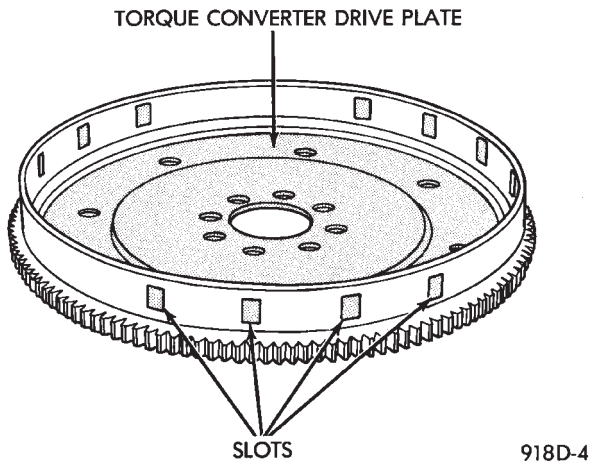

Fig. 10 Timing Slots

The crankshaft sensor is located on the rear of the transmission housing, above the differential housing (Fig. 11). The sensor connector has a christmas tree attached to the heater tube bracket. The bottom of the sensor is positioned next to the drive plate.

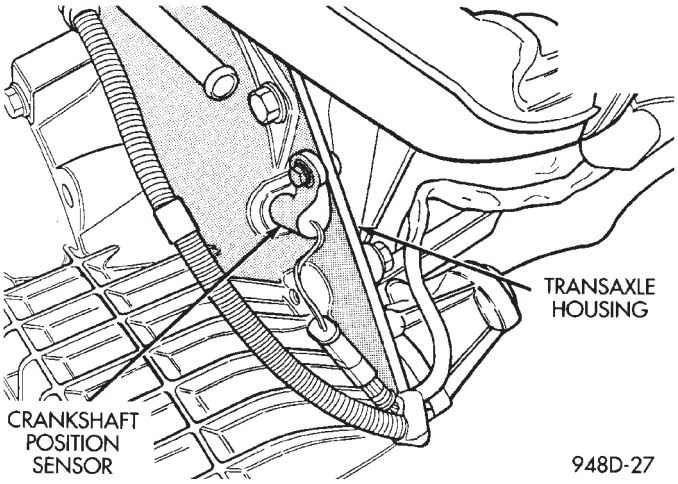

Fig. 11 Crankshaft Position Sensor Location—Typical

CAMSHAFT POSITION SENSOR—2.4L

The PCM determines fuel injection synchronization and cylinder identification from inputs provided by the camshaft position sensor (Fig. 12) and crankshaft position sensor. From the two inputs, the PCM determines crankshaft position.

The camshaft position sensor attaches to the rear of the cylinder head (Fig. 13). A target magnet attaches to the rear of the camshaft and indexes to the correct position. The target magnet has four different poles arranged in an asymmetrical pattern. As the target magnet rotates, the camshaft position sensor senses the change in polarity (Fig. 14). The sensor input switches from high (5 volts) to low (0.30 volts) as the target magnet rotates. When the north pole of the target magnet passes under the sensor, the output switches high. The sensor output switches low when the south pole of the target magnet passes underneath.

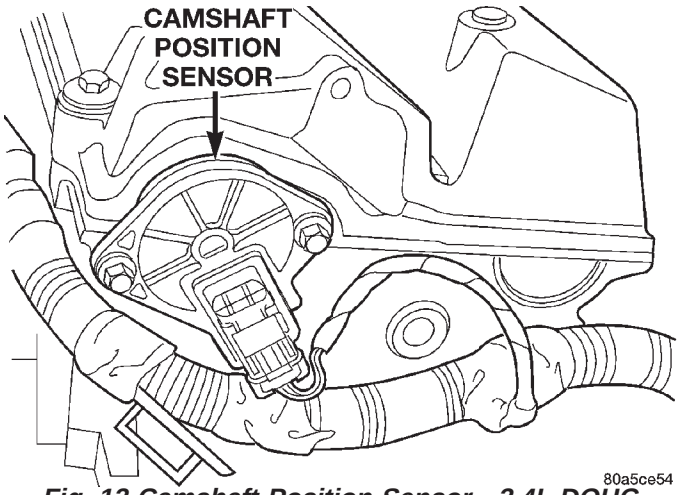

Fig. 12 Camshaft Position Sensor—2.4L DOHC

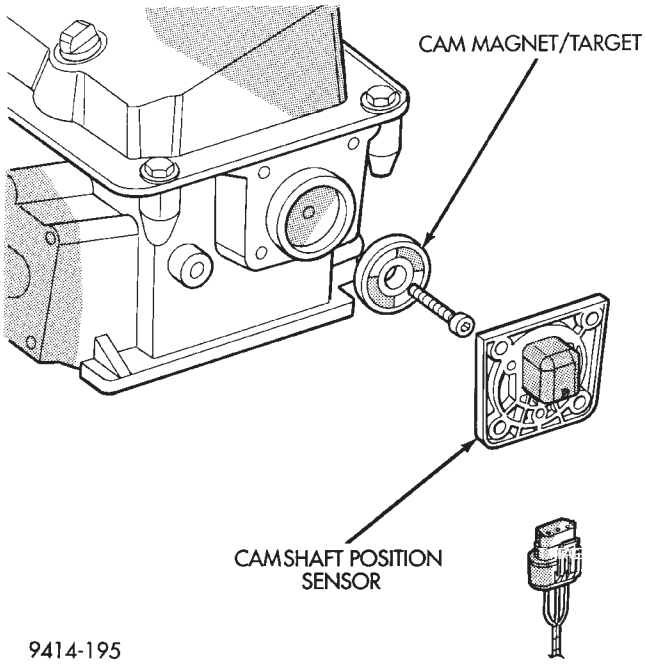

Fig. 13 Target Magnet—Typical

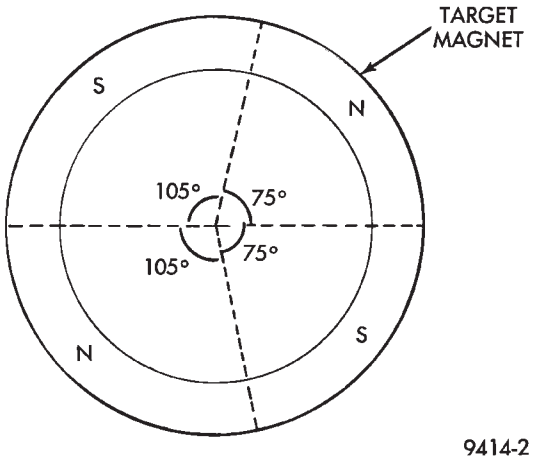

Fig. 14 Target Magnet Polarity

DESCRIPTION AND OPERATION (Continued)

The camshaft position sensor is mounted to the rear of the cylinder head. The sensor also acts as a thrust plate to control camshaft endplay.

CAMSHAFT POSITION SENSOR—2.5L

The PCM determines fuel injection synchronization and cylinder identification from inputs provided by the camshaft position sensor and crankshaft position sensor. From the two inputs, the PCM determines crankshaft position.

The 2.5L engine is equipped with a camshaft driven mechanical distributor, containing a shaft driven distributor rotor. The distributor is also equipped with an internal camshaft position (fuel sync) sensor (Fig. 15). This sensor provides fuel injection synchronization and cylinder identification to the PCM.

The camshaft position sensor contains a hall effect device called a sync signal generator. This sync signal generator detects a rotating pulse ring (shutter) on the distributor shaft. The pulse ring rotates 180 through the sync signal generator. Its signal is used in conjunction with the crankshaft position sensor to differentiate between fuel injection and spark events. It is also used to synchronize the fuel injectors with their respective cylinders.

When the leading edge of the shutter enters the sync signal generator, the interruption of magnetic field causes the voltage to switch high. This causes a sync signal of approximately 5 volts.

When the trailing edge of the shutter leaves the sync signal generator, the change of magnetic field causes the sync signal voltage to switch low to 0 volts.

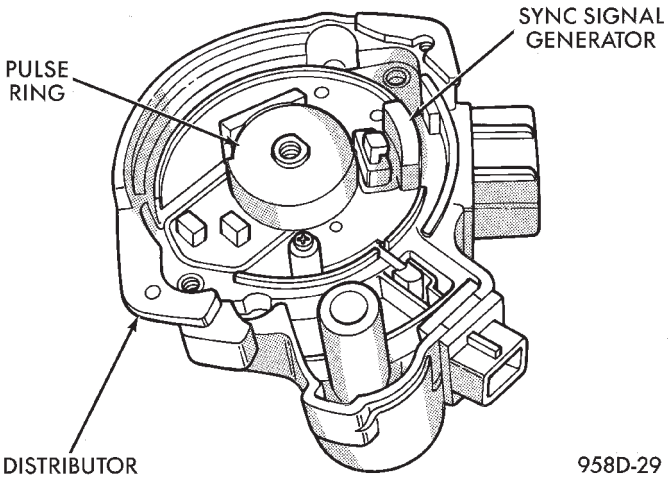

Fig. 15 Camshaft Position Sensor—2.5L Engine

Since the shutter rotates at half crankshaft speed, it may take 1 engine revolution during cranking for the PCM to determine the position of piston number 6.

ENGINE COOLANT TEMPERATURE SENSOR

The Engine Coolant Temperature (ECT) sensor has one element. The sensor provides an input voltage to the PCM. The sensor is a variable resistance (thermistor) with a range of -40°F to 265°F. As coolant temperature varies, the sensors resistance changes, resulting in a different input voltage to the PCM.

The PCM contains different spark advance schedules for cold and warm engine operation. The schedules reduce engine emissions and improve driveability. Because spark advance changes at different engine operating temperatures during warm-up, all spark advance testing should be done with the engine fully warmed.

The PCM demands slightly richer air-fuel mixtures and higher idle speeds until the engine reaches normal operating temperature.

The engine coolant sensor input is also used for radiator fan control.

INTAKE AIR TEMPERATURE SENSOR—2.4/2.5L

The Intake Air Temperature (IAT) sensor measures the temperature of the air as it enters the engine. The sensor supplies one of the inputs the PCM uses to determine injector pulse-width.

The IAT sensor threads into the intake manifold (Fig. 16) or (Fig. 17).

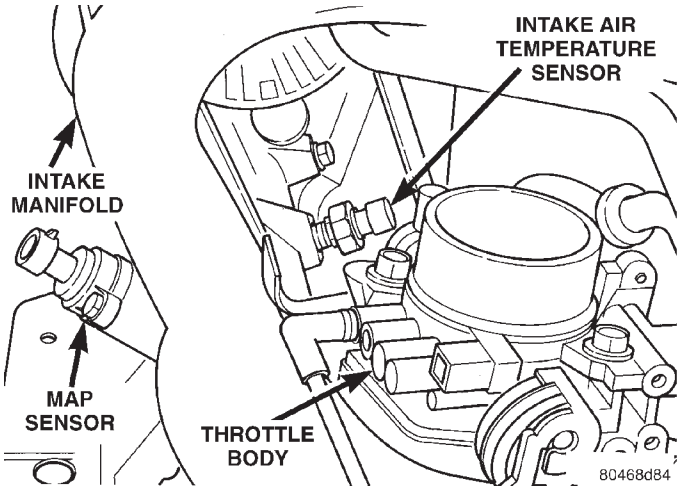

Fig. 16 Intake Air Temperature Sensor and MAP Sensor—2.4L

KNOCK SENSOR

The knock sensor threads into the side of the cylinder block in front of the starter motor. When the knock sensor detects a knock in one of the cylinders, it sends an input signal to the PCM. In response, the PCM retards ignition timing for all cylinders by a scheduled amount.

Knock sensors contain a piezoelectric material which constantly vibrates and sends an input voltage (signal) to the PCM while the engine operates. As the

DESCRIPTION AND OPERATION (Continued)

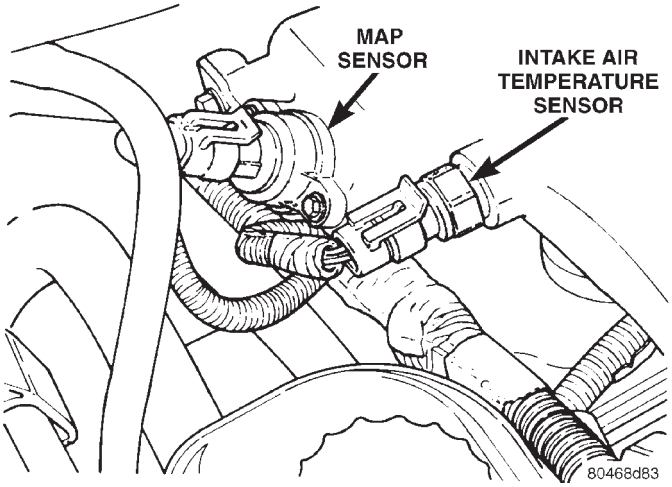

Fig. 17 Intake Air Temperature Sensor and MAP Sensor—2.5L

intensity of the crystal's vibration increase, the knock sensor output voltage also increases.

NOTE: Over or under tightening effects knock sensor performance, possibly causing improper spark control.

MANIFOLD ABSOLUTE PRESSURE (MAP) SENSOR

The Powertrain Control Module (PCM) supplies 5 volts to the Manifold Absolute Pressure (MAP) sensor. The MAP sensor converts intake manifold pressure into voltage. The PCM monitors the MAP sensor output voltage. As vacuum increases, MAP sensor voltage decreases proportionately. Also, as vacuum decreases, MAP sensor voltage increases proportionately.

During cranking, before the engine starts running, the PCM determines atmospheric air pressure from the MAP sensor voltage. While the engine operates, the PCM determines intake manifold pressure from the MAP sensor voltage. Based on MAP sensor voltage and inputs from other sensors, the PCM adjusts spark advance and the air/fuel mixture.

The MAP sensor mounts to the intake manifold.

THROTTLE POSITION SENSOR (TPS)

The TPS mounts to the side of the throttle body. The TPS connects to the throttle blade shaft. The TPS is a variable resistor that provides the Powertrain Control Module (PCM) with an input signal (voltage). The signal represents throttle blade position. As the position of the throttle blade changes, the resistance of the TPS changes.

The PCM supplies approximately 5 volts to the TPS. The TPS output voltage (input signal to the powertrain control module) represents throttle blade position. The TPS output voltage to the PCM varies from approximately 0.38 volts to 1.2 volts at minimum throttle opening (idle) to a maximum of 3.1 volts to 4.4 volts at wide open throttle.

Along with inputs from other sensors, the PCM uses the TPS input to determine current engine operating conditions. The PCM also adjusts fuel injector pulse width and ignition timing based on these inputs.

LOCK KEY CYLINDER

The lock cylinder is inserted in the end of the housing opposite the ignition switch. The ignition key rotates the cylinder to 5 different detents (Fig. 18):

- Accessory
- Off (lock)
- Unlock
- On/Run
- Start

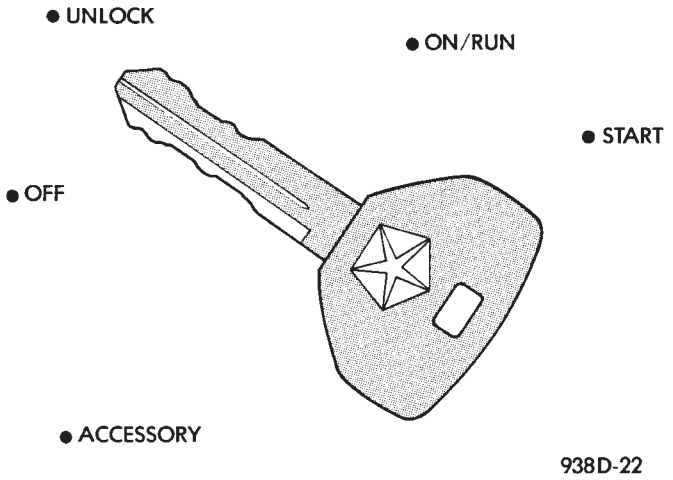

Fig. 18 Ignition Lock Cylinder Detents

IGNITION INTERLOCK

All vehicles equipped with automatic transaxles have an interlock system. The system prevents shifting the vehicle out of Park unless the ignition lock cylinder is in the Off, Run or Start position. In addition, the operator cannot rotate the key to the lock position unless the shifter is in the park position. On vehicles equipped with floor shift refer to Group 21 - Transaxle for Automatic Transmission Shifter/Ignition Interlock.

DIAGNOSIS AND TESTING

TESTING FOR SPARK AT COIL—2.4L

WARNING: THE DIRECT IGNITION SYSTEMS GENERATES APPROXIMATELY 40,000 VOLTS. PERSONAL INJURY COULD RESULT FROM CONTACT WITH THIS SYSTEM.

DIAGNOSIS AND TESTING (Continued)

The coil pack contains independent coils. Each coil must be checked individually.

CAUTION: Spark plug wire damage may occur if the spark plug is moved more than 1/4 inch away from the engine ground.

CAUTION: Do not leave any one spark plug cable disconnected any longer than 30 seconds or possible heat damage to catalytic converter will occur.

CAUTION: Test must be performed at idle and in park only with the parking brake on.

NOTE: New isolated engine valve cover may not provide adequate ground. Use engine block as engine ground.

Use a new spark plug and spark plug cable for the following test.

(1) Insert a new spark plug into the new spark plug boot. Ground the plug to the engine (Fig. 19). Do not hold with your hand.

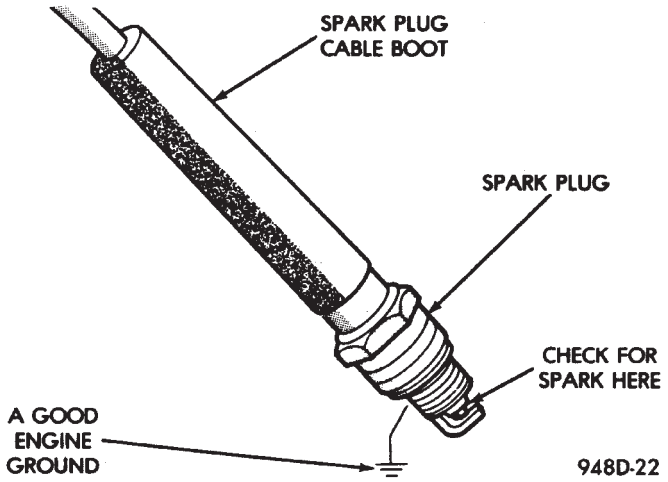

Fig. 19 Testing For Spark

(2) Starting with coil insulator #1, remove it from the DIS coil.

(3) Plug the test spark plug cable onto #1 coil tower. Make sure a good connection is made; there should be a click sound.

(4) Crank the engine and look for spark across the electrodes of the spark plug.

CAUTION: Always install the cable back on the coil tower after testing to avoid damage to the coil and catalytic converter.

(5) Repeat the above test for the remaining coils. If there is no spark during all cylinder tests, proceed to the Failure To Start Test.

(6) If one or more tests indicate irregular, weak, or no spark, proceed to Check Coil Test.

TESTING FOR SPARK AT COIL—2.5L

WARNING: THE IGNITION SYSTEM GENERATES APPROXIMATELY 32,000 VOLTS. PERSONAL INJURY COULD RESULT FROM CONTACT WITH THIS SYSTEM.

CAUTION: Spark plug wire damage may occur if the spark plug is moved more than 1/4 inch away from the engine ground.

CAUTION: Do not leave any one spark plug cable disconnected any longer than necessary during test or possible heat damage to catalytic converter will occur. Total test time must not exceed 1 minute. Use a new spark plug and spark plug cable for the following test.

(1) Insert a new spark plug into the new spark plug boot. Ground the plug to the engine (Fig. 19).

(2) Remove distributor cap. Refer to Distributor Service in this section.

(3) Plug test spark plug cable onto coil tower.

(4) Crank engine and look for spark across the electrodes of the spark plug. If there is no spark, check for: (Fig. 20)

- Continuity from PCM pin 11 to 6-way connector terminal 1
- Continuity between ground and 6-way connector terminal 2
- Continuity from PCM pin 6 to 2-way connector terminal 2
- Correct resistance in distributor cap, refer to Distributor Cap Resistance Test.

(5) If all circuits show continuity, replace distributor assembly.

CHECK COIL TEST—2.4L

Coil one fires cylinders 1 and 4, coil two fires cylinders 2 and 3. Each coil tower is labeled with the number of the corresponding cylinder.

(1) Remove ignition cables and measure the resistance of the cables. Resistance must be within the range shown in the Cable Resistance Chart in Specifications. Replace any cable not within tolerance.

(2) Disconnect the electrical connector from the coil pack.

(3) Measure the primary resistance of each coil. At the coil, connect an ohmmeter between the B+ pin

DIAGNOSIS AND TESTING (Continued)

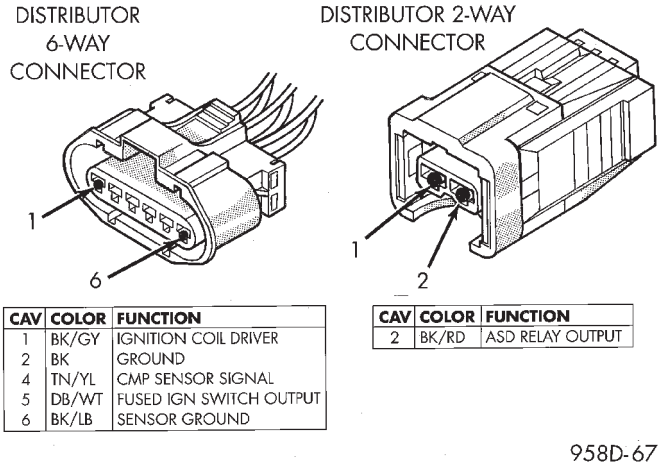

CAV	COLOR	FUNCTION
1	BK/GY	IGNITION COIL DRIVER
2	BK	GROUND
4	TN/YL	CMP SENSOR SIGNAL
5	DB/WT	FUSED IGN SWITCH OUTPUT
6	BK/LB	SENSOR GROUND

CAV	COLOR	FUNCTION
2	BK/RD	ASD RELAY OUTPUT

Fig. 20 Distributor Connectors

and the pin corresponding to the cylinders in question (Fig. 21). Resistance on the primary side of each coil should be 0.45 - 0.65 ohm at (70° to 80° F). Replace the coil if resistance is not within tolerance.

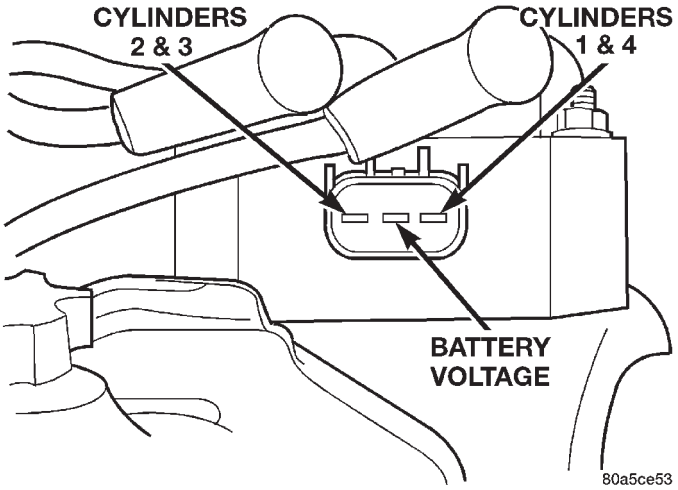

Fig. 21 Terminal Identification

(4) Remove ignition cables from the secondary towers of the coil. Measure the secondary resistance of the coil between the towers of each individual coil (Fig. 22). Secondary resistance should be 7,000 to 15,800 ohms. Replace the coil if resistance is not within tolerance.

CHECK COIL TEST—2.5L

Measure primary coil resistance at the 2 pin distributor connector. Resistance should be between 0.6 and 0.8 ohms.

Measure secondary coil resistance between the coil tower and each terminal of the 2 pin distributor connector. Resistance should be 12k to 18k ohms.

FAILURE TO START TEST—2.0/2.4L

This no-start test checks the camshaft position sensor and crankshaft position sensor.

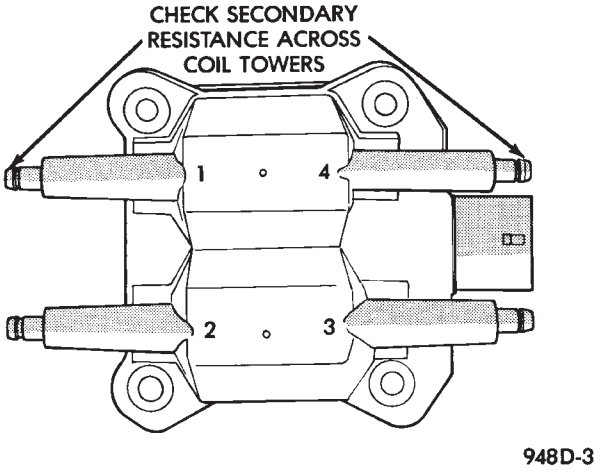

Fig. 22 Checking Ignition Coil Secondary Resistance

Use the DRB scan tool to test the camshaft position sensor and the sensor circuits. Refer to the appropriate Powertrain Diagnostics Procedure Manual. Refer to the wiring diagrams section for circuit information.

The Powertrain Control Module (PCM) supplies 8 volts to the camshaft position sensor and crankshaft position sensor through one circuit. If the 8 volt supply circuit shorts to ground, neither sensor will produce a signal (output voltage to the PCM).

When the ignition key is turned and left in the On position, the PCM automatically energizes the Auto Shutdown (ASD) relay. However, the controller de-energizes the relay within one second because it has not received a camshaft position sensor signal indicating engine rotation.

During cranking, the ASD relay will not energize until the PCM receives a camshaft position sensor signal. Secondly, the ASD relay remains energized only if the controller senses a crankshaft position sensor signal immediately after detecting the camshaft position sensor signal.

(1) Check battery voltage. Voltage should approximately 12.66 volts or higher to perform failure to start test.

(2) Disconnect the harness connector from the coil pack (Fig. 23).

(3) Connect a test light to the B+ (battery voltage) terminal of the coil electrical connector and ground. The B+ wire for the DIS coil is the center terminal. **Do not spread the terminal with the test light probe.**

(4) Turn the ignition key to the **ON position.** The test light should flash On and then Off. **Do not turn the Key to off position, leave it in the On position** .

(a) If the test light flashes momentarily, the PCM grounded the ASD relay. Proceed to step 5.

DIAGNOSIS AND TESTING (Continued)

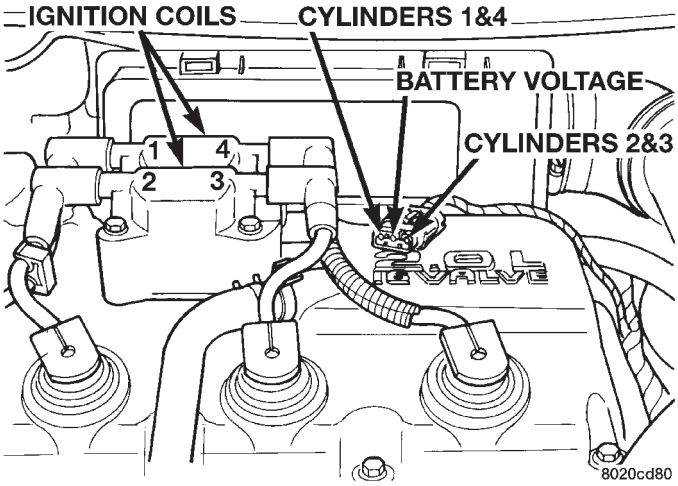

Fig. 23 Ignition Coil Engine Harness Connector

(b) If the test light did not flash, the ASD relay did not energize. The cause is either the relay or one of the relay circuits. Use the DRB scan tool to test the ASD relay and circuits. Refer to the appropriate Powertrain Diagnostics Procedure Manual. Refer to the wiring diagrams section for circuit information.

(5) Crank the engine. (If the key was placed in the off position after step 4, place the key in the On position before cranking. Wait for the test light to flash once, then crank the engine.)

(6) If the test light momentarily flashes during cranking, the PCM is not receiving a crankshaft position sensor signal.

(7) If the test light did not flash during cranking, unplug the crankshaft position sensor connector. Turn the ignition key to the off position. Turn the key to the On position, wait for the test light to momentarily flash once, then crank the engine. If the test light momentarily flashes, the crankshaft position sensor is shorted and must be replaced. If the light did not flash, the cause of the no-start is in either the crankshaft position sensor/camshaft position sensor 8 volt supply circuit, or the camshaft position sensor output or ground circuits.

FAILURE TO START TEST—2.5L

NOTE: Before proceeding with this test make sure Testing For Spark At Coil has been performed. Failure to do this may lead to unnecessary diagnostic time and wrong test results.

Refer to Group 25 for On-Board Diagnostic checks. Also, refer to the DRB scan tool and the appropriate Powertrain Diagnostic Procedures manual. These checks will help diagnose problems with the PCM and ASD relay.

IGNITION TIMING PROCEDURE

The engines for this vehicle, use a fixed ignition system. The PCM regulates ignition timing. Basic ignition timing is not adjustable.

CAMSHAFT POSITION SENSOR AND CRANKSHAFT POSITION SENSOR

The output voltage of a properly operating camshaft position sensor or crankshaft position sensor switches from high (5.0 volts) to low (0.3 volts). By connecting an Moper Diagonostic System (MDS) and engine analyzer to the vehicle, technicians can view the square wave pattern.

DISTRIBUTOR CAP RESISTANCE TEST—2.5L

There is a resistor built into the distributor cap. Connect an ohmmeter between the center button and igntion coil terminal. Ohmmeter should read 5000 ohms.

ENGINE COOLANT TEMPERATURE SENSOR

Refer to Group 14, Fuel System for Diagnosis and Testing.

INTAKE AIR TEMPERATURE SENSOR

Refer to Group 14, Fuel System, for Diagnosis and Testing.

MANIFOLD ABSOLUTE PRESSURE (MAP) SENSOR TEST

Refer to Group 14, Fuel System for Diagnosis and Testing.

THROTTLE POSITION SENSOR

To perform a complete test of the this sensor and its circuitry, refer to the DRB scan tool and appropriate Powertrain Diagnostics Procedures manual. To test the throttle position sensor only, refer to the following:

The Throttle Position Sensor (TPS) can be tested with a digital voltmeter (DVM). The center terminal of the sensor is the output terminal. One of the other terminals is a 5 volt supply and the remaining terminal is ground.

Connect the DVM between the center and sensor ground terminal. Refer to Group 8W - Wiring Diagrams for correct pinout.

With the ignition switch in the ON position, check the output voltage at the center terminal wire of the connector. Check the output voltage at idle and at Wide-Open-Throttle (WOT). At idle, TPS output voltage should be approximately 0.38 volts to 1.2 volts. At wide open throttle, TPS output voltage should be approximately 3.1 volts to 4.4 volts. The output voltage should gradually increase as the throttle plate moves slowly from idle to WOT.

DIAGNOSIS AND TESTING (Continued)

Check for spread terminals at the sensor and PCM connections before replacing the TPS.

SPARK PLUG CONDITION

NORMAL OPERATING CONDITIONS

The few deposits present will be probably light tan or slightly gray in color with most grades of commercial gasoline (Fig. 24). There will not be evidence of electrode burning. Gap growth will not average more than approximately 0.025 mm (.001 in) per 1600 km (1000 miles) of operation for non platinum spark plugs. Non-platnium spark plugs that have normal wear can usually be cleaned, have the electrodes filed and regapped, and then reinstalled.

CAUTION: Never attempt to file the electrodes or use a wire brush for cleaning platinum spark plugs. This would damage the platinum pads which would shorten spark plug life.

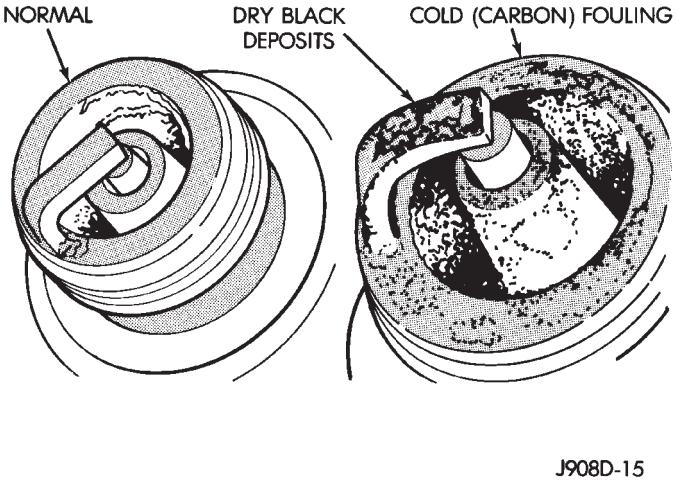

Fig. 24 Normal Operation and Cold (Carbon) Fouling

Some fuel refiners in several areas of the United States have introduced a manganese additive (MMT) for unleaded fuel. During combustion, fuel with MMT may coat the entire tip of the spark plug with a rust colored deposit. The rust color deposits can be misdiagnosed as being caused by coolant in the combustion chamber. Spark plug performance is not affected by MMT deposits.

COLD FOULING (CARBON FOULING)

Cold fouling is sometimes referred to as carbon fouling because the deposits that cause cold fouling are basically carbon (Fig. 24). A dry, black deposit on one or two plugs in a set may be caused by sticking valves or misfire conditions. Cold (carbon) fouling of the entire set may be caused by a clogged air cleaner.

Cold fouling is normal after short operating periods. The spark plugs do not reach a high enough operating temperature during short operating periods. **Replace carbon fouled plugs with new spark plugs.**

FUEL FOULING

A spark plug that is coated with excessive wet fuel is called fuel fouled. This condition is normally observed during hard start periods. **Clean fuel fouled spark plugs with compressed air and reinstall them in the engine.**

OIL FOULING

A spark plug that is coated with excessive wet oil is oil fouled. In older engines, wet fouling can be caused by worn rings or excessive cylinder wear. Break-in fouling of new engines may occur before normal oil control is achieved. **Replace oil fouled spark plugs with new ones.**

OIL OR ASH ENCRUSTED

If one or more plugs are oil or ash encrusted, evaluate the engine for the cause of oil entering the combustion chambers (Fig. 25). Sometimes fuel additives can cause ash encrustation on an entire set of spark plugs. **Ash encrusted spark plugs can be cleaned and reused.**

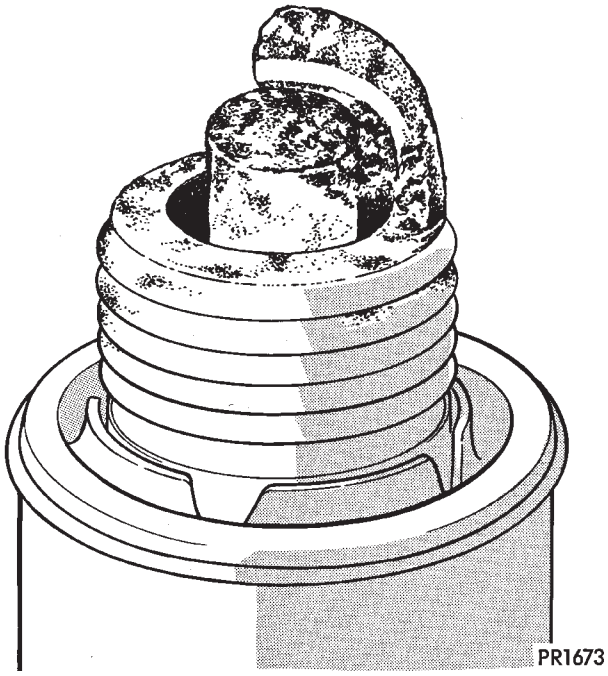

Fig. 25 Oil or Ash Encrusted

HIGH SPEED MISS

When replacing spark plugs because of a high speed miss condition; **wide open throttle operation should be avoided for approximately 80 km (50 miles) after installation of new plugs.** This will allow deposit shifting in the combustion chamber

DIAGNOSIS AND TESTING (Continued)

to take place gradually and avoid plug destroying splash fouling shortly after the plug change.

ELECTRODE GAP BRIDGING

Loose deposits in the combustion chamber can cause electrode gap bridging. The deposits accumulate on the spark plugs during continuous stop-and-go driving. When the engine is suddenly subjected to a high torque load, the deposits partially liquefy and bridge the gap between the electrodes (Fig. 26). This short circuits the electrodes. **Spark plugs with electrode gap bridging can be cleaned and reused.**

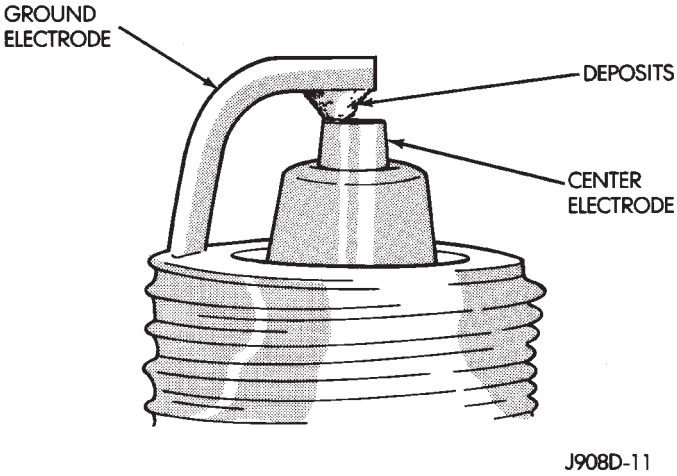

Fig. 26 Electrode Gap Bridging

SCAVENGER DEPOSITS

Fuel scavenger deposits may be either white or yellow (Fig. 27). They may appear to be harmful, but are a normal condition caused by chemical additives in certain fuels. These additives are designed to change the chemical nature of deposits and decrease spark plug misfire tendencies. Notice that accumulation on the ground electrode and shell area may be heavy but the deposits are easily removed. **Spark plugs with scavenger deposits can be considered normal in condition, cleaned and reused.**

CHIPPED ELECTRODE INSULATOR

A chipped electrode insulator usually results from bending the center electrode while adjusting the spark plug electrode gap. Under certain conditions, severe detonation also can separate the insulator from the center electrode (Fig. 28). **Spark plugs with chipped electrode insulators must be replaced.**

PREIGNITION DAMAGE

Excessive combustion chamber temperature can cause preignition damage. First, the center electrode dissolves and the ground electrode dissolves somewhat later (Fig. 29). Insulators appear relatively

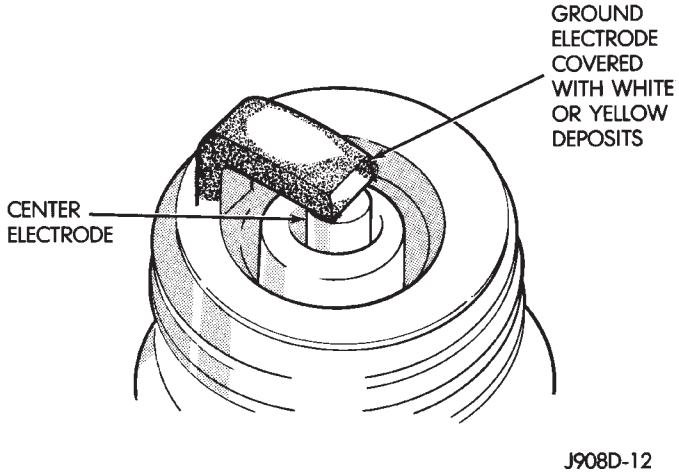

Fig. 27 Scavenger Deposits

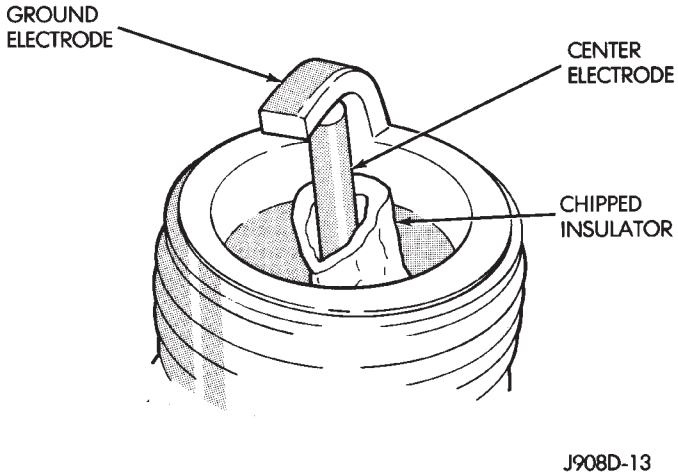

Fig. 28 Chipped Electrode Insulator

deposit free. Determine if the spark plugs are the correct type, as specified on the VECI label, or if other operating conditions are causing engine overheating.

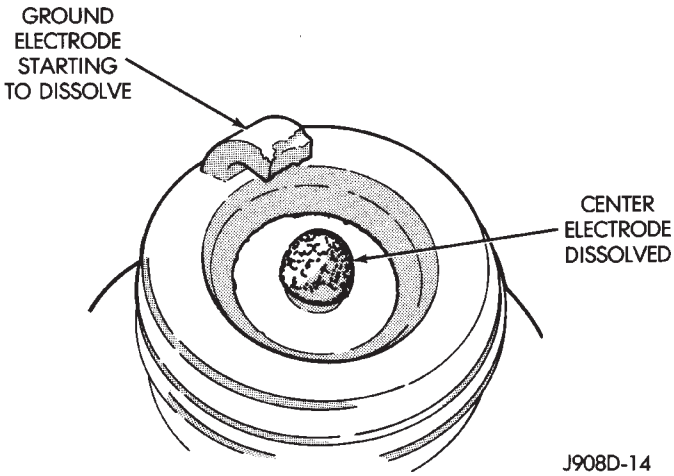

Fig. 29 Preignition Damage

DIAGNOSIS AND TESTING (Continued)

SPARK PLUG OVERHEATING

Overheating is indicated by a white or gray center electrode insulator that also appears blistered (Fig. 30). The increase in electrode gap will be considerably in excess of 0.001 in per 1000 miles of operation. This suggests that a plug with a cooler heat range rating should be used. Over advanced ignition timing, detonation and cooling system malfunctions also can cause spark plug overheating.

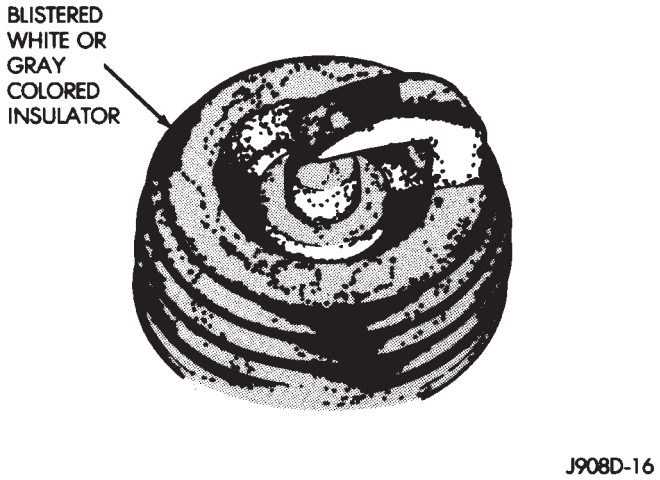

Fig. 30 Spark Plug Overheating

REMOVAL AND INSTALLATION

POWERTRAIN CONTROL MODULE

The PCM attaches to a bracket between the air cleaner housing and Power Distribution Center (PDC).

REMOVAL

(1) Disconnect negative cable from auxillary jumper terminal (Fig. 31).

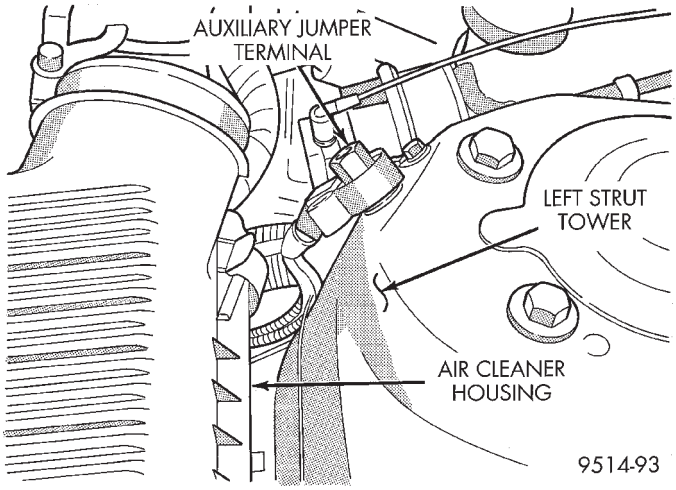

Fig. 31 Auxillary Jumper Terminal

(2) Disconnect both 40-way connectors from PCM.

(3) Remove screws attaching PCM to bracket (Fig. 32).

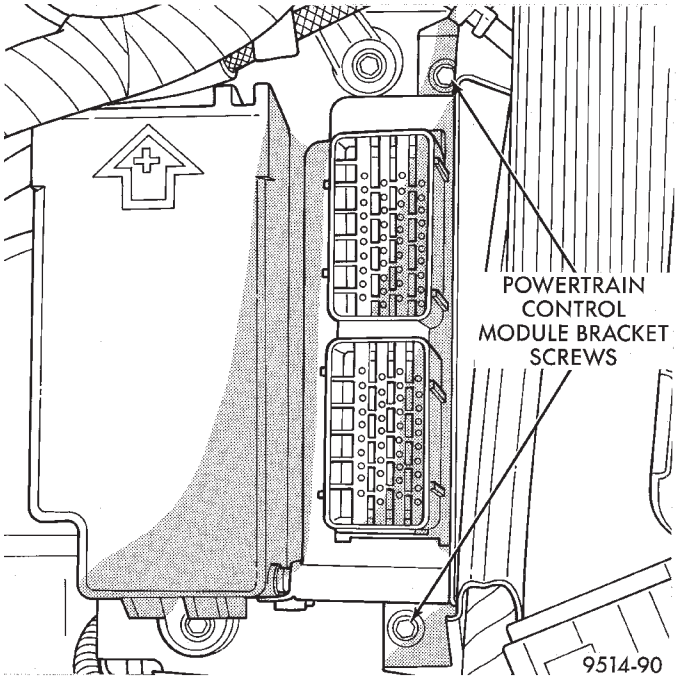

Fig. 32 PCM Bracket Screws

(4) Lift PCM up to remove it from vehicle.

INSTALLATION

(1) Install PCM. Tighten mounting screws.

(2) Attach both 40-way connectors to PCM.

(3) Connect negative cable to auxillary jumper terminal.

SPARK PLUG CABLES—2.4L

Clean high tension cables with a cloth moistened with a non- flammable solvent. Wipe the cables dry. Check for brittle or cracked insulation.

Resistance cables are identified by the words **Electronic Suppression** .

REMOVAL

Disconnect the cable from the ignition coil first.

The cables insulate the spark plugs and cover the top of the spark plug tubes (Fig. 3). To remove the cables, lightly grasp the top of the cable. Rotate the insulator 90° and pull straight up. **Ensure the #1 and #4 cables run under the #2 and #3 ignition coil towers. Keep #4 cable away from the oil fill cap.**

INSTALLATION

Ensure the #1 and #4 cables run under the #2 and #3 ignition coil towers. Keep #4 cable away from the oil fill cap.

Rotate the insulator 90° and push straight down. Connect the cable to the ignition coil.

REMOVAL AND INSTALLATION (Continued)

SPARK PLUG—2.4L

Failure to route the cables properly could cause the radio to reproduce ignition noise, cross ignition of the spark plugs or short circuit the cables to ground.

NOTE: REMOVE cables from coil first before removing spark plug insulator.

REMOVAL

Always remove the spark plug cable by grasping the top of the spark plug insulator, turning the boot 1/2 turn and pulling straight up in a steady motion.

(1) Remove the spark plug using a quality socket with a rubber or foam insert.

(2) Inspect the spark plug condition. Refer to Spark Plug Condition in this section.

INSTALLATION

(1) To avoid cross threading, start the spark plug into the cylinder head by hand.

(2) Tighten spark plugs to 28 N·m (20 ft. lbs.) torque.

(3) Install spark plug insulators over spark plugs. Ensure the top of the spark plug insulator covers the upper end of the spark plug tube.

(4) Install spark plug cable to coil.

SPARK PLUGS AND CABLES—2.5L

When replacing the spark plug and coil cables, route the cables correctly and secure them in the appropriate retainers. Failure to route the cables properly can cause the radio to reproduce ignition noise, cross ignition of the spark plugs or short circuit the cables to ground.

CAUTION: Never attempt to file the electrodes or use a wire brush for cleaning platinum plugs. This would damage the platinum pads which would shorten spark plug life.

Apply a very small amount of anti-seize compound to the threads when reinstalling the vehicle's original spark plugs that have been determined good. **Do not apply anti-seize compound to new spark plugs.**

NOTE: Anti-seize compound is electrically conductive and can cause engine misfires if not applied correctly. It is extremely important that the anti-seize compound doesn't make contact with the spark plug electrodes or ceramic insulator.

SPARK PLUG REMOVAL—#2, #4 or #6

Always remove the ignition cable by grasping at the spark plug boot turning, the boot 1/2 turn and pulling straight back in a steady motion.

(1) Prior to removing the spark plug spray compressed air around the spark plug hole and the area around the spark plug.

(2) Remove the spark plug using a quality socket with a rubber or foam insert.

(3) Inspect the spark plug condition. Refer to Spark Plug Condition in this section.

INSTALLATION

(1) To avoid cross threading, start the spark plug into the cylinder head by hand.

(2) Tighten spark plugs to 28 N·m (20 ft. lbs.) torque.

(3) Install ignition cables over spark plugs.

SPARK PLUG REMOVAL—#1, #3 or #5

(1) Disconnect negative cable from auxillary jumper terminal.

(2) Unplug connectors from MAP and intake air temperature sensors (Fig. 33).

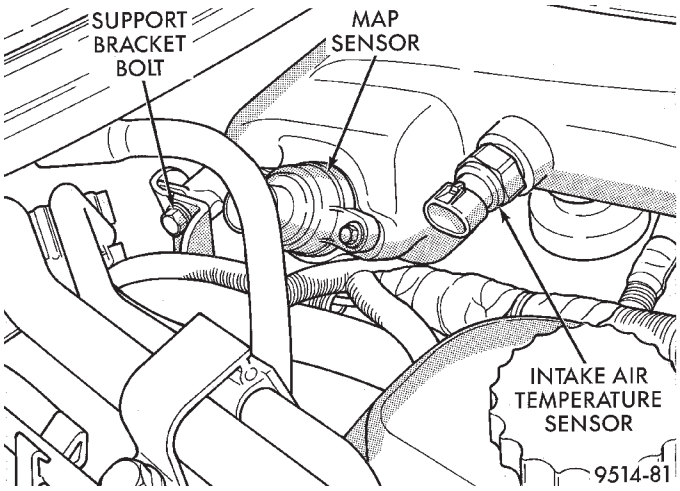

Fig. 33 Intake Manifold Sensors and Left Plenum Support Bolt

(3) Remove plenum support bracket bolt located rearward of MAP sensor (Fig. 33).

(4) Remove bolt holding air inlet resonator to intake plenum (Fig. 34).

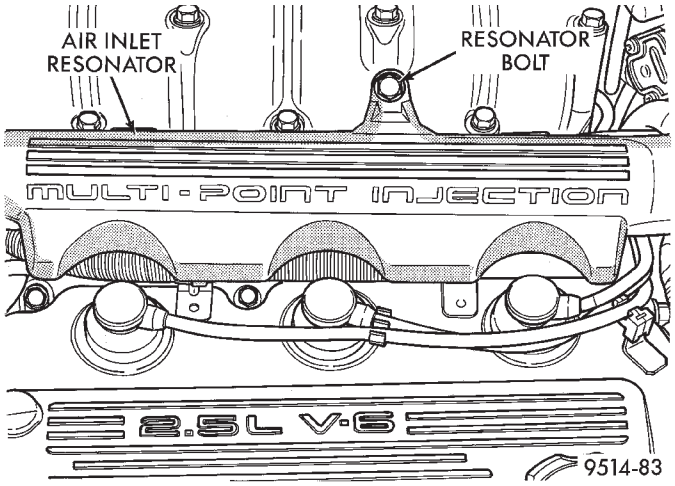

Fig. 34 Air Inlet Resonator

(5) Loosen throttle body air inlet hose clamp.

REMOVAL AND INSTALLATION (Continued)

(6) Release snaps holding air cleaner housing cover to housing.

(7) Remove air cleaner cover and inlet hoses from engine.

(8) Unplug TPS and idle air control motor connectors (Fig. 35) and (Fig. 36).

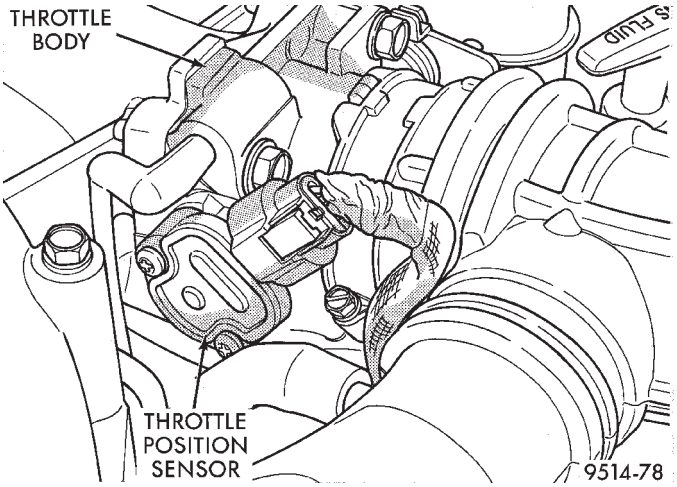

Fig. 35 Throttle Position Sensor

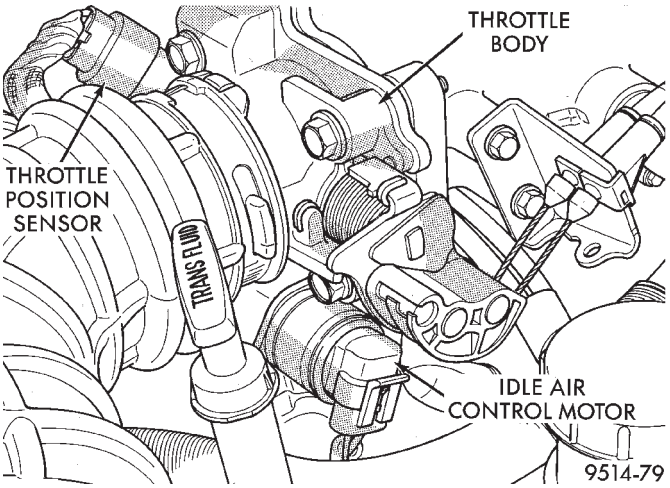

Fig. 36 Idle Air Control Motor

(9) Pry retainer tab back on throttle cable and slide cable out of bracket (Fig. 37). Remove cable from throttle lever.

(10) Slide Speed control cable out of bracket, if equipped (Fig. 37). Remove cable from throttle lever.

(11) Remove EGR tube from intake plenum (Fig. 38).

(12) Remove plenum support bracket bolt located rearward of EGR tube (Fig. 38).

(13) Remove bolts holding upper intake plenum and remove plenum.

(14) Always remove the ignition cable by grasping at the spark plug boot turning, the boot 1/2 turn and pulling straight back in a steady motion.

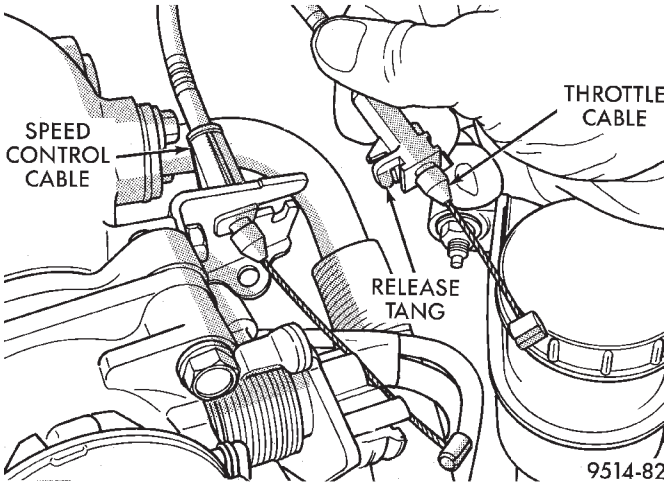

Fig. 37 Throttle Cable Attachment

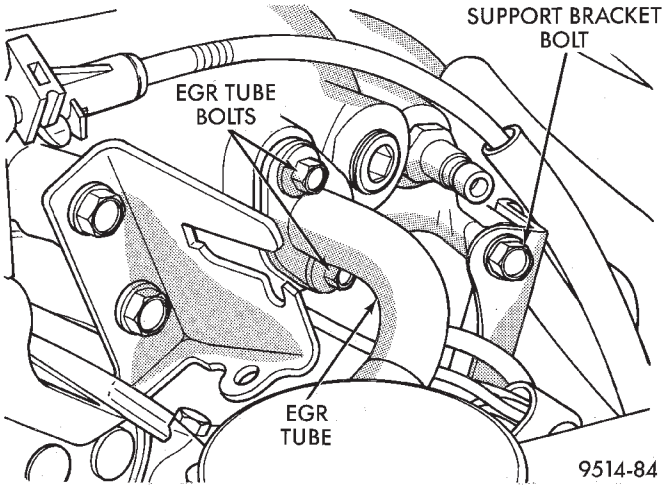

Fig. 38 EGR Tube and Right Manifold Support Bolt

(15) Prior to removing the spark plug spray compressed air around the spark plug hole and the area around the spark plug.

(16) Remove the spark plug using a quality socket with a rubber or foam insert.

(17) Inspect the spark plug condition. Refer to Spark Plug Condition in this section.

SPARK PLUG INSTALLATION

(1) To avoid cross threading, start the spark plug into the cylinder head by hand.

(2) Tighten spark plugs to 28 N·m (20 ft. lbs.) torque.

(3) Install ignition cables over spark plugs.

(4) Install new gasket and position upper intake plenum. Tighten plenum bolts to 18 N·m (13 ft. lbs.) torque.

(5) Install bolts at plenum support brackets. Tighten bolts to 18 N·m (13 ft. lbs.).

(6) Install EGR tube to plenum. Tighten EGR tube to intake manifold plenum screws to 11 N·m (95 in. lbs.).

REMOVAL AND INSTALLATION (Continued)

(7) Install throttle and speed control (if equipped) cables.

(8) Attach electrical connectors to sensors.

(9) Tighten air inlet tube clamps to 3 N·m ±1 (25 ±5 in. lbs.) torque.

(10) Connect negative terminal to auxiliary jumper terminal.

SPARK PLUG TUBES

The spark plugs tubes are pressed into the cylinder head. Sealant is applied to the end of the tube before installation. For engine information, refer to Group 9, Engines.

IGNITION COIL—2.4L

The electronic ignition coil pack attaches directly to the valve cover (Fig. 39).

REMOVAL

(1) Disconnect electrical connector from coil pack.

(2) Remove coil pack mounting nuts.

(3) Remove coil pack.

INSTALLATION

(1) Install coil pack on valve cover.

(2) Transfer spark plug cables to new coil pack. The coil pack towers are numbered with the cylinder identification. Be sure the ignition cables snap onto the towers.

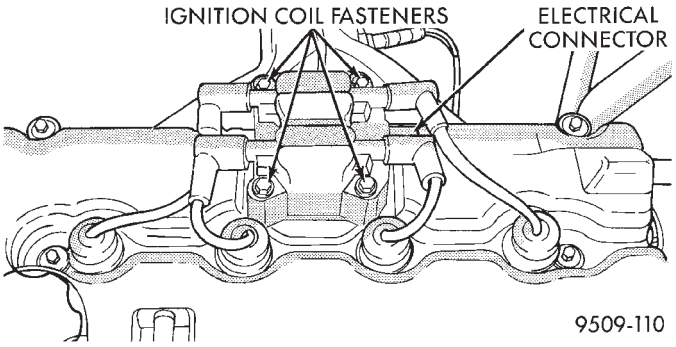

Fig. 39 Electronic Ignition Coil Pack—2.4L

IGNITION COIL—2.5L

The ignition coil is located in the distributor housing (Fig. 40).

If ignition coil is defective, replace distributor assembly. Refer to Distributor Service.

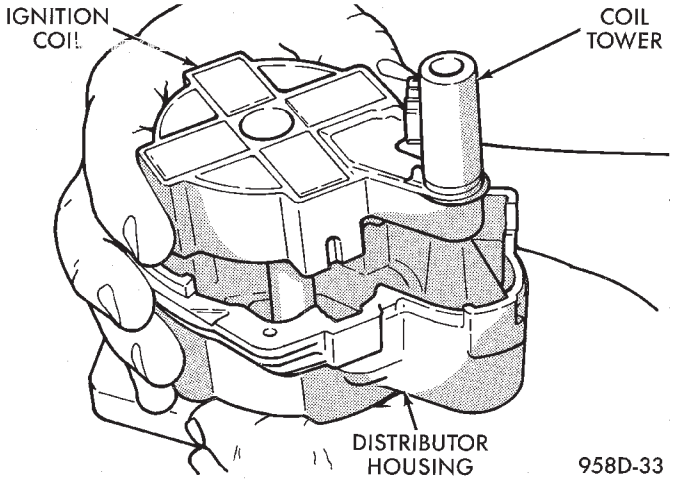

Fig. 40 Ignition Coil

AUTOMATIC SHUTDOWN RELAY

The relay is located in the Power Distribution Center (PDC) (Fig. 41). The PDC is located in the engine compartment. For the location of the relay within the PDC, refer to the PDC cover for location. Check electrical terminals for corrosion and repair as necessary.

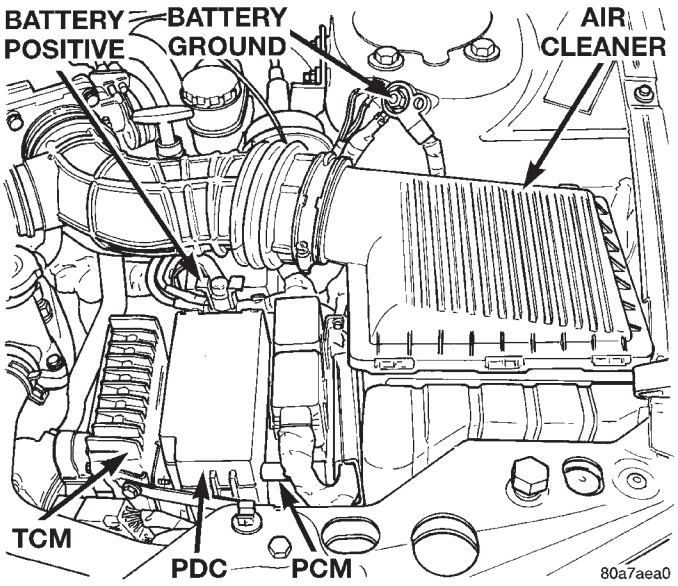

Fig. 41 Power Distribution Center (PDC)

REMOVAL AND INSTALLATION (Continued)

CAMSHAFT POSITION SENSOR—DOHC

The camshaft position sensor is mounted to the rear of the cylinder head (Fig. 42).

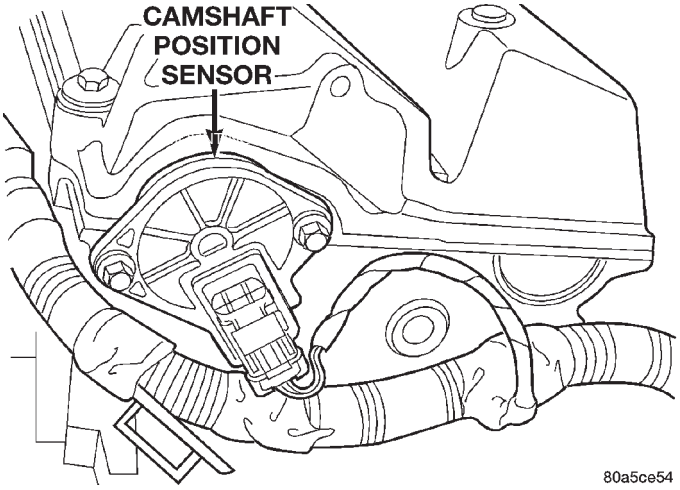

Fig. 42 Camshaft Position Sensor Location—DOHC

REMOVAL

(1) Remove filtered air tube from the throttle body and air cleaner housing.

(2) Disconnect electrical connector from camshaft position sensor.

(3) Remove camshaft position sensor mounting screws. Remove sensor.

(4) Loosen screw attaching target magnet to rear of camshaft (Fig. 43).

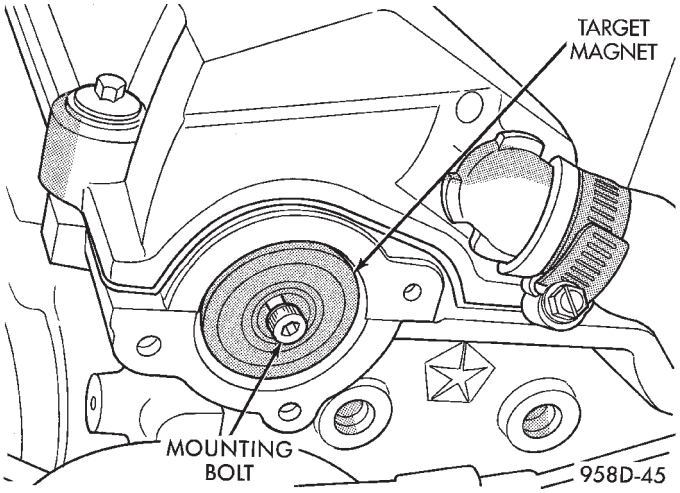

Fig. 43 Target Magnet Removal/Installation

INSTALLATION

The target magnet has locating dowels that fit into machined locating holes in the end of the camshaft (Fig. 44).

(1) Install target magnet in end of camshaft. Tighten mounting screw to 3 N·m (30 in. lbs.) torque.

(2) Install camshaft position sensor. Tighten sensor mounting screws to 9 N·m (80 in. lbs.) torque.

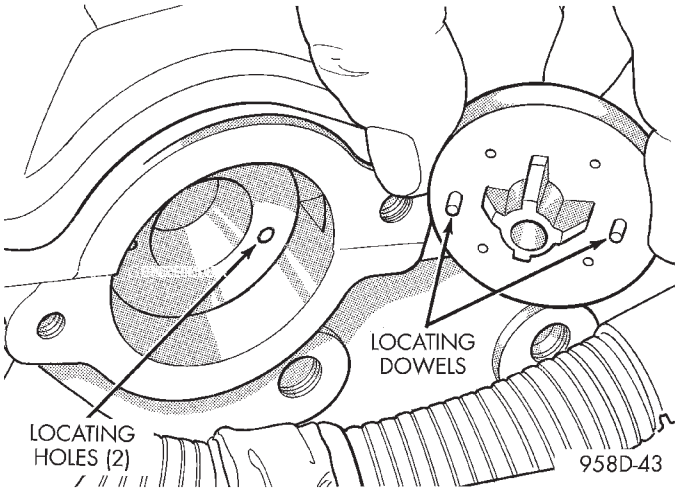

Fig. 44 Target Magnet Installation

(3) Carefully attach electrical connector to camshaft position sensor. Installation at an angle may damage the sensor pins.

(4) Install filtered air tube. Tighten clamps to 3 N·m ±1 (25 in. lbs. ±5) torque.

CRANKSHAFT POSITION SENSOR—2.4 L

The crankshaft position sensor mounts to the engine block behind the generator, just above the oil filter (Fig. 45).

REMOVAL

(1) Disconnect electrical connector from crankshaft position sensor.

(2) Remove sensor mounting screw. Remove sensor.

INSTALLATION

(1) Reverse procedure for installation.

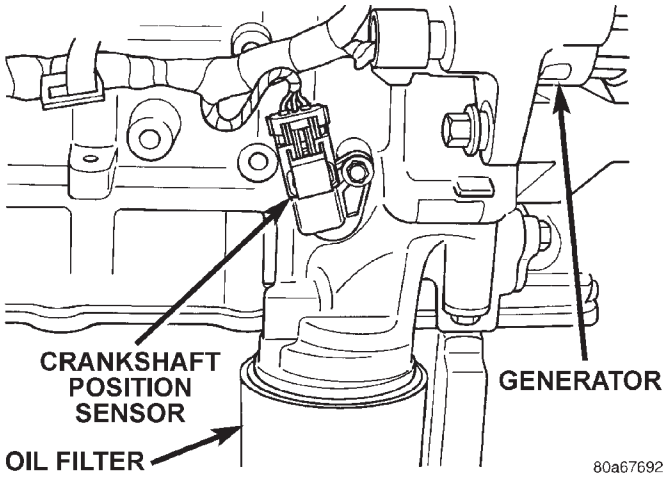

Fig. 45 Crankshaft Position Sensor—2.4L

REMOVAL AND INSTALLATION (Continued)

CRANKSHAFT POSITION SENSOR—2.5L

REMOVAL

(1) Remove speed control servo from driver's side strut tower.

(2) Remove crankshaft position sensor retaining bolt (Fig. 46).

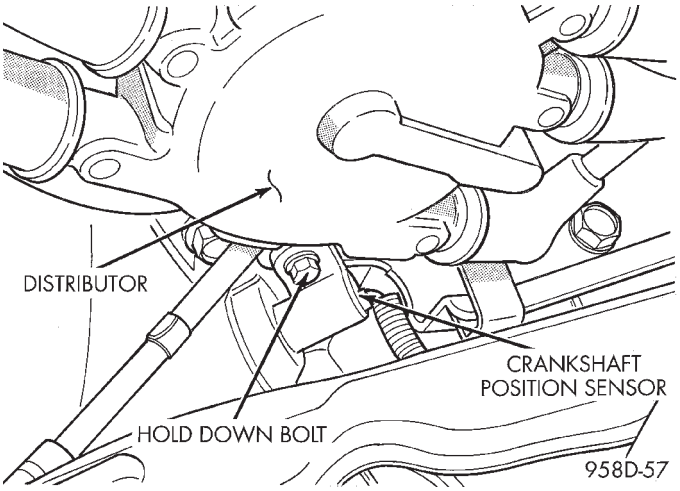

Fig. 46 Crankshaft Position Sensor

(3) Pull crankshaft position sensor straight up out of the transaxle housing.

(4) (Disconnect crankshaft position sensor electrical connector from the wiring harness connector.

INSTALLATION—ADJUSTABLE

All vehicles will be equipped with an adjustable crankshaft position sensor. This can be identified by an elongated mounting hole in the sensor.

NOTE: If the removed sensor is to be reinstalled, clean off the old spacer on the sensor face. A NEW SPACER must be attached to the sensor face before installation. If the sensor is being replaced, confirm that the paper spacer is attached to the face of the new sensor (Fig. 47).

(1) Install sensor in transaxle and push sensor down until contact is made with the drive plate. While holding the sensor in this position, install and tighten the retaining bolt to 12 N·m (105 in. lbs.) torque.

(2) Connect crankshaft position sensor electrical connector to the wiring harness connector.

(3) Attach connector to heater tube bracket.

(4) Install speed control servo. Tighten nuts to 9 N·m (80 in. lbs.) torque.

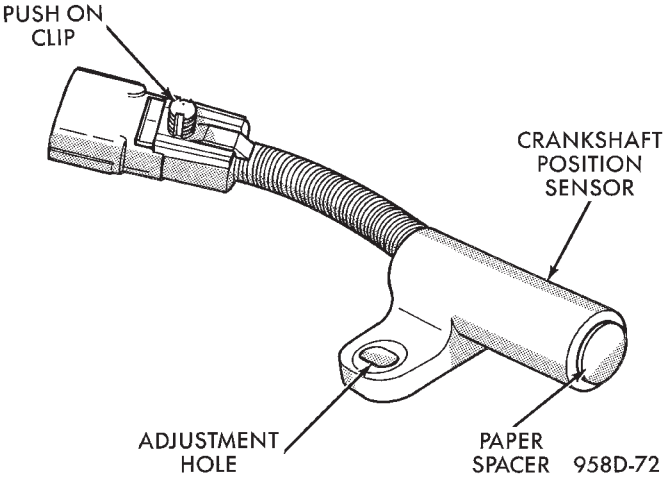

Fig. 47 Crankshaft Position Sensor and Spacer

DISTRIBUTOR—2.5L

REMOVAL

(1) Remove bolt holding air inlet resonator to intake manifold.

(2) Loosen clamps holding air cleaner cover to air cleaner housing.

(3) Remove PCV make-up air hose from air inlet tube.

(4) Loosen hose clamp at throttle body.

(5) Remove air inlet tube, resonator and air cleaner cover.

(6) Remove EGR tube.

(7) Remove spark plug cables from distributor cap.

(8) Loosen distributor cap holddown screws and remove cap (Fig. 48).

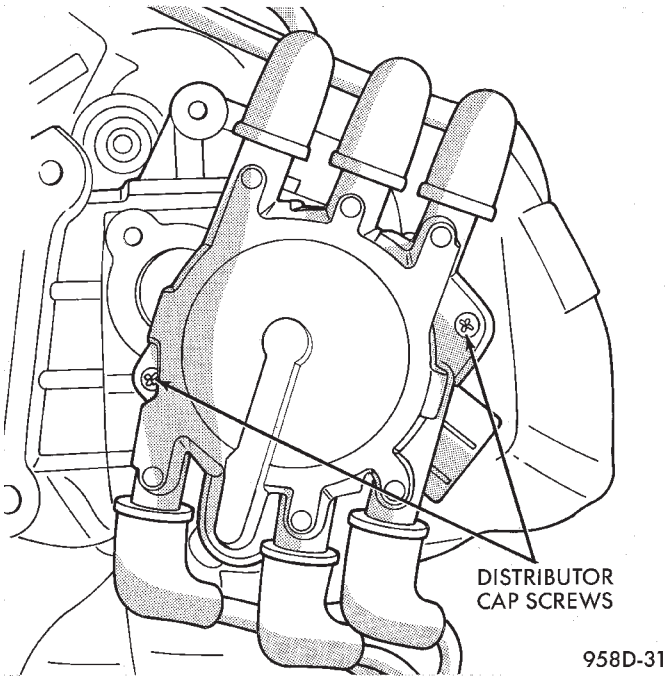

Fig. 48 Distributor Cap Screws

REMOVAL AND INSTALLATION (Continued)

(9) Mark the rotor position and remove rotor. The mark indicates where to position the rotor when reinstalling the distributor.

(10) Remove 2 harness connectors from distributor (Fig. 49).

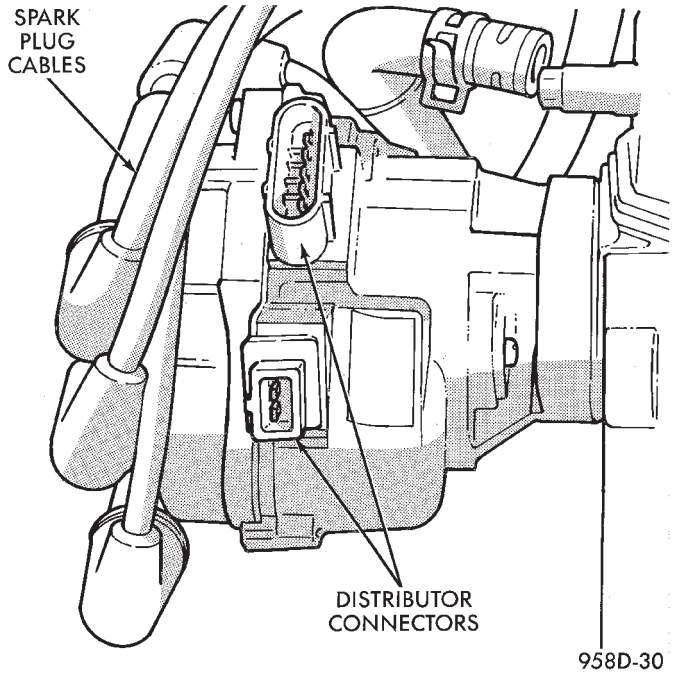

Fig. 49 Distributor Electrical Connectors—Viewed From Rear of Distributor

(11) Remove 2 sets of distributor holddown nuts and washers from studs.

(12) Remove bolt and spark plug cable mounting bracket from top of distributor housing.

(13) Remove bolt and transmission dipstick tube.

(14) Carefully remove distributor from engine.

INSTALLATION

(1) Install rotor on shaft.

(2) Position distributor in engine. Make certain that O-ring is properly seated on distributor. If O-ring is cracked or nicked replace with a new one.

(3) Carefully engage distributor drive with slotted end of camshaft. When the distributor is installed properly, the rotor will be in line with previously scribe line on air intake plenum. **If engine was cranked while distributor was removed, establish proper relationship between the distributor shaft and Number 1 piston position as follows:**

(a) Rotate the crankshaft until number one piston is at top of compression stroke.

(b) Rotate rotor to number one rotor terminal.

(c) Lower distributor into opening, engaging distributor drive with drive on camshaft. With distributor fully seated on engine, rotor should be under the number 1 terminal.

(4) Install distributor holddown washers and nuts. Tighten nuts to 13 N·m (9 ft. lbs.).

(5) Install spark plug cable bracket.

(6) Install 2 harness connectors to distributor.

(7) Install distributor cap.

(8) Install spark plug cables onto distributor cap. The cap is numbered as well as the cables. Ensure sure all high tension wires are firmly in the cap towers.

(9) Install transmission dispstick tube.

(10) Install EGR tube to intake manifold. Tighten bolts to 11 N·m (95 in. lbs.) torque.

DISTRIBUTOR CAP—2.5L

REMOVAL

(1) Remove bolt holding air inlet resonator to intake manifold.

(2) Loosen clamps holding air cleaner cover to air cleaner housing.

(3) Remove PCV make-up air hose from air inlet tube.

(4) Loosen hose clamp at throttle body.

(5) Remove air inlet tube, resonator and air cleaner cover.

(6) Remove EGR tube.

(7) Remove spark plug cables from distributor cap.

(8) Loosen distributor cap holddown screws and remove cap (Fig. 48).

(9) Transfer cables from old cap to new cap. The cap is numbered and so are the cables.

INSTALLATION

(1) Install distributor cap.

(2) Install distributor holddown washers and nuts. Tighten nuts to 13 N·m (9 ft. lbs.).

(3) Install EGR tube.

(4) Install air inlet tube, resonator and air cleaner cover.

(5) Tighten hose clamp at throttle body.

(6) Install PCV make-up air hose from air inlet tube.

(7) Tighten clamps holding air cleaner cover to air cleaner housing.

(8) Install bolt holding air inlet resonator to intake manifold.

DISTRIBUTOR ROTOR—2.5L

REMOVAL

(1) Remove bolt holding air inlet resonator to intake manifold.

(2) Loosen clamps holding air cleaner cover to air cleaner housing.

(3) Remove PCV make-up air hose from air inlet tube.

(4) Loosen hose clamp at throttle body.

REMOVAL AND INSTALLATION (Continued)

(5) Remove air inlet tube, resonator and air cleaner cover.
(6) Remove EGR tube.
(7) Remove spark plug cables from distributor cap.
(8) Loosen distributor cap holddown screws and remove cap (Fig. 48).
(9) Mark the rotor position and remove rotor. The mark indicates where to position the rotor when reinstalling the distributor.

INSTALLATION

(1) Install rotor on shaft.
(2) Install distributor cap.
(3) Install spark plug cables onto distributor cap. The cap is numbered as well as the cables. Ensure sure all high tension wires are firmly in the cap towers.
(4) Install EGR tube to intake manifold. Tighten bolts to 11 N·m (95 in. lbs.) torque.
(5) Install air inlet tube, resonator and air cleaner cover.
(6) Tighten hose clamp at throttle body.
(7) Install PCV make-up air hose to air inlet tube.
(8) Tighten clamps holding air cleaner cover to air cleaner housing.
(9) Tighten bolt holding air inlet resonator to intake manifold.

ENGINE COOLANT TEMPERATURE SENSOR—2.5L

The Engine Coolant Temperature (ECT) sensor is located next to the thermostat housing (Fig. 50).

REMOVAL

(1) With the engine cold, drain the cooling system until coolant level drops below sensor. Refer to Group 7, Cooling System.
(2) Disconnect ECT sensor electrical connector.
(3) Remove ECT sensor.

INSTALLATION

2.5L

(1) Install ECT sensor. Tighten sensor to 7 N·m (60 in. lbs.) torque.
(2) Attach electrical connector to sensor.
(3) Fill cooling system. Refer to Group 7, Cooling System.

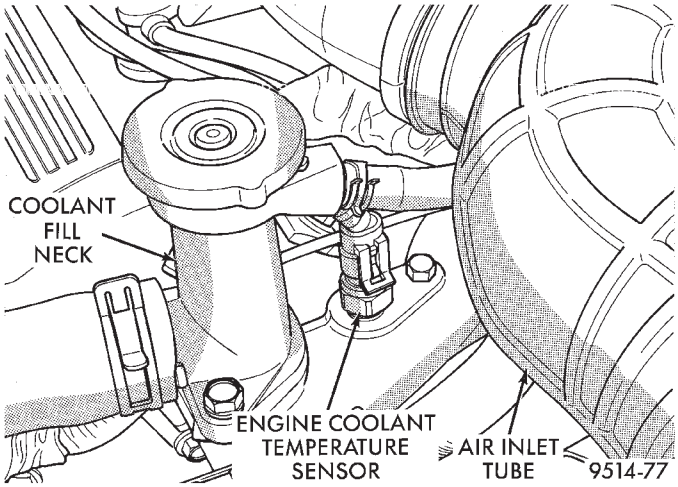

Fig. 50 Engine Coolant Temperature Sensor—2.5L Engine

INTAKE AIR TEMPERATURE SENSOR

The intake air temperature sensor threads into the intake manifold plenum (Fig. 51) or (Fig. 52).

REMOVAL

(1) Remove electrical connector from sensor.
(2) Remove sensor.

INSTALLATION

(1) Install sensor. Tighten sensor to 28 N·m (20 ft. lbs.) torque.
(2) Attach electrical connector to sensor.

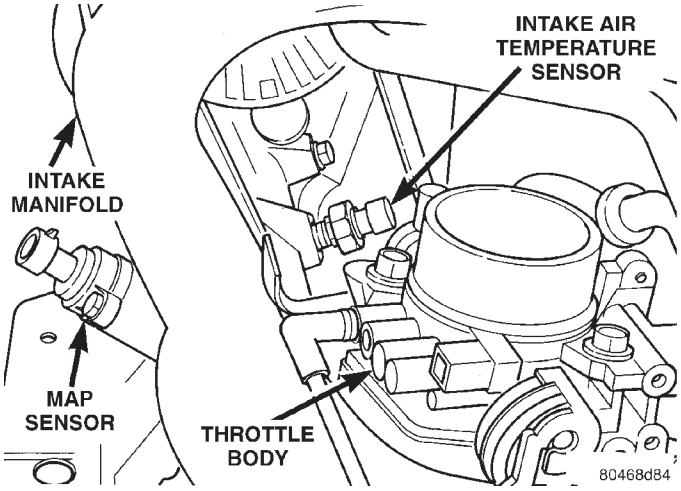

Fig. 51 Intake Air Temperature Sensor and MAP Sensor—2.4L

MANIFOLD ABSOLUTE PRESSURE (MAP) SENSOR—2.4L

The MAP sensor attaches to the intake manifold plenum (Fig. 51)

REMOVAL AND INSTALLATION (Continued)

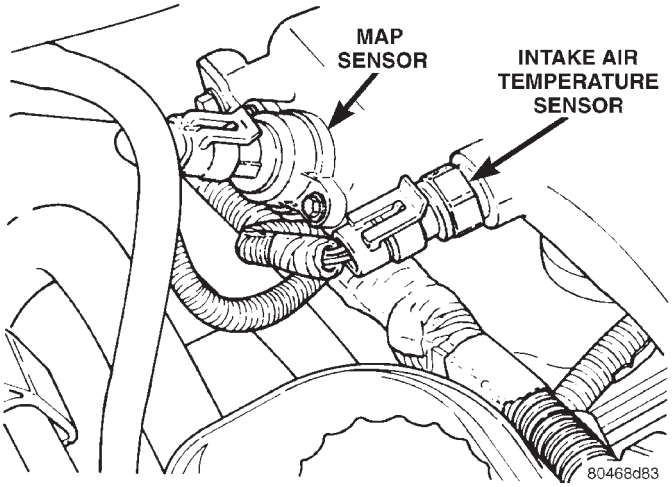

Fig. 52 Intake Air Temperature Sensor and MAP Sensor—2.5L

REMOVAL

(1) Disconnect the electrical connector from the MAP sensor.

(2) Remove sensor mounting screws.

(3) Remove sensor.

INSTALLATION

(1) Insert sensor into intake manifold while making sure not to damage O-ring seal.

(2) Tighten mounting screws to 2 N·m (20 in. lbs) torque.

(3) Attach electrical connector to sensor.

MANIFOLD ABSOLUTE PRESSURE (MAP) SENSOR—2.5L

REMOVAL

(1) Remove mounting screws from sensor (Fig. 52).

(2) Unplug harness connector and remove sensor.

INSTALLATION

(1) Reverse the above procedure for installation.

THROTTLE POSITION SENSOR

Refer to Group 14, Fuel Injection Section, for Removal/Installation.

IGNITION SWITCH

The ignition switch attaches to the lock cylinder housing on the end opposite the lock cylinder (Fig. 53). For ignition switch terminal and circuit identification, refer to Group 8W, Wiring Diagrams.

REMOVAL

(1) Disconnect negative cable from auxillary jumper terminal on driver's side strut tower.

(2) Remove fuse panel cover from left end of instrument panel. Remove screw holding end of instrument panel top cover (Fig. 54).

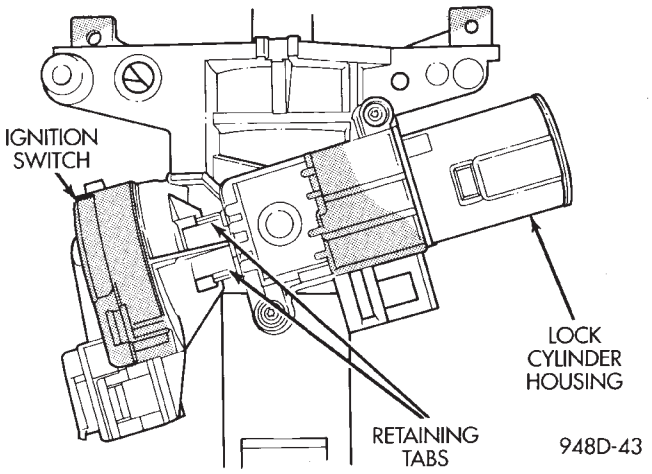

Fig. 53 Ignition Switch—Viewed From Below Column

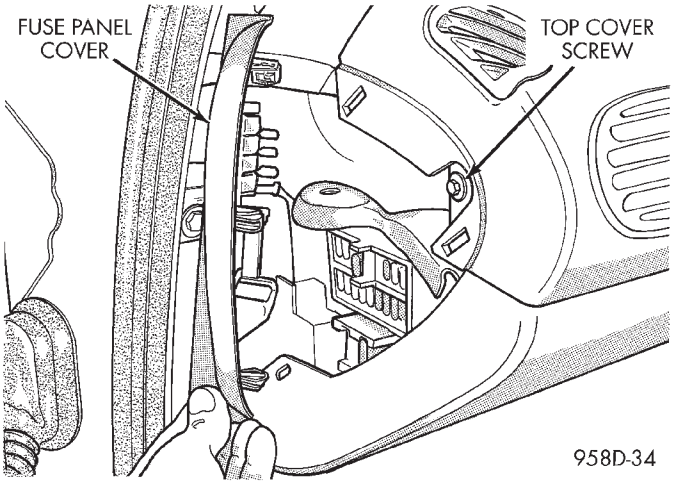

Fig. 54 Instrument Panel Top Cover—Left End

(3) Pull center bezel off (Fig. 55).

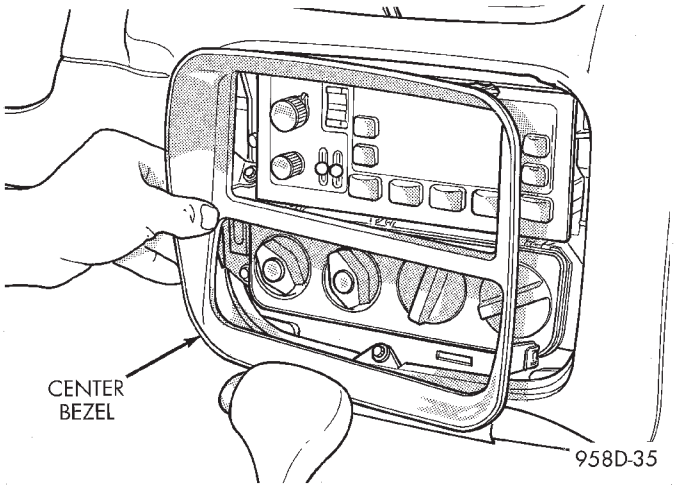

Fig. 55 Center Bezel

REMOVAL AND INSTALLATION (Continued)

(4) Remove screws holding instrument panel top cover to center of instrument panel (Fig. 56).

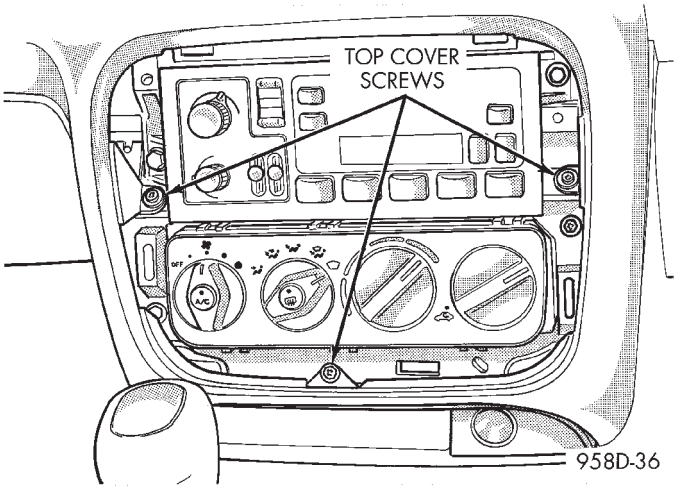

Fig. 56 Instrument Panel Top Cover—Center

(5) Pull instrument panel top cover up enough to gain access to knee bolster screws (Fig. 57).

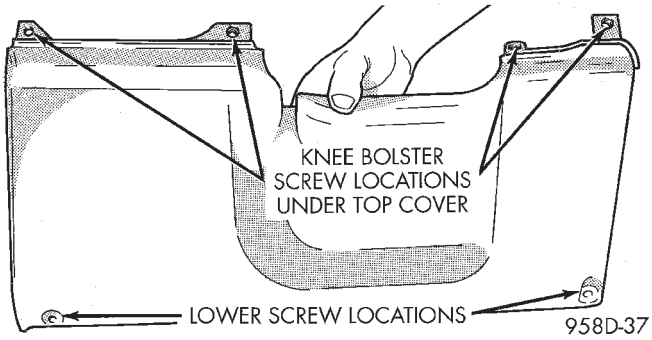

Fig. 57 Knee Bolster Attaching Points

(6) Remove lower knee bolster screws and knee bolster.

(7) Remove screws from lower steering column shroud (Fig. 58).

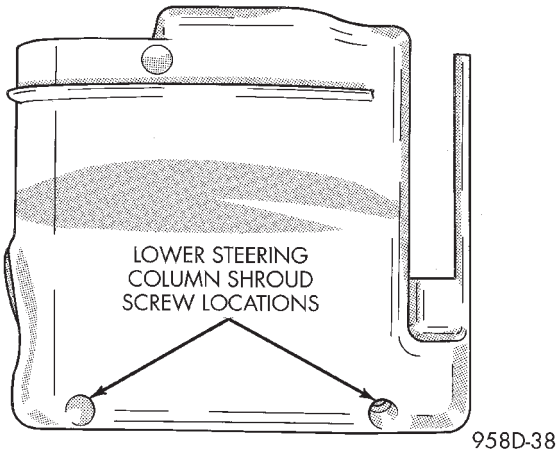

Fig. 58 Lower Steering Column Shroud Screw Locations

(8) Pull lower shroud to clear ignition cylinder and key release, if equipped (Fig. 59).

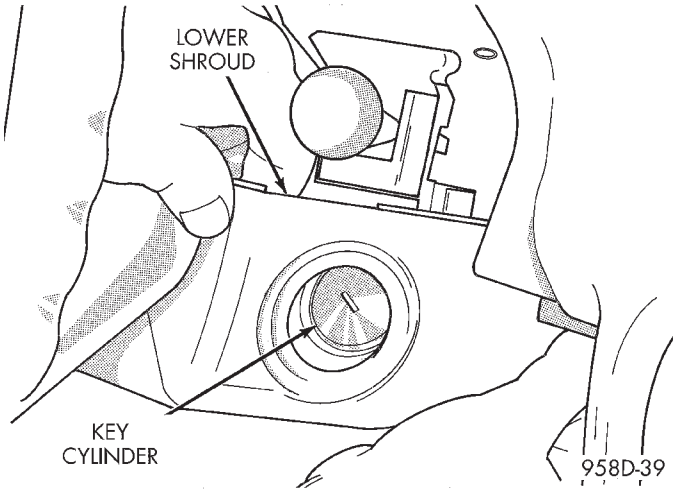

Fig. 59 Remove Lower Shroud From Ignition Cylinder

(9) Hold tilt wheel lever down and slide lower shroud forward to remove it from column (Fig. 60).

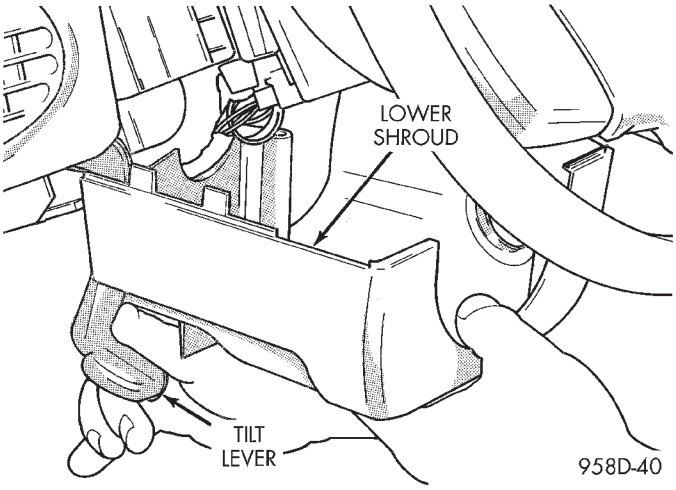

Fig. 60 Lower Shroud Removal

(10) Tilt wheel to full down position and remove upper steering column shroud.

REMOVAL AND INSTALLATION (Continued)

(11) Remove screws holding multi-function switch to lock housing (Fig. 61).

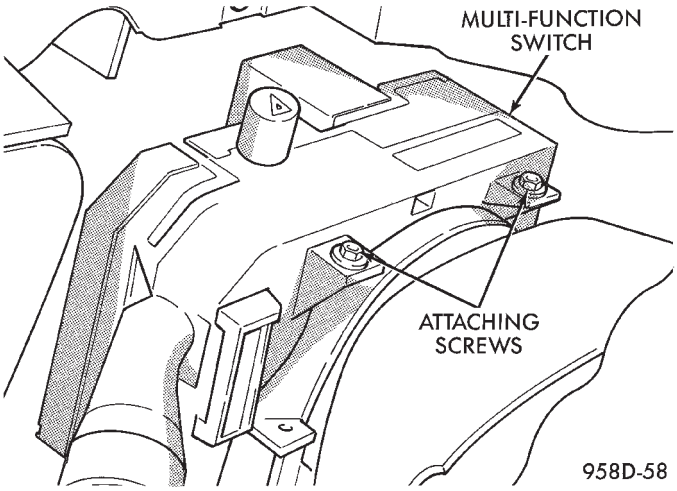

Fig. 61 Multi-Function Switch Removal/Installation

(12) Place key cylinder in RUN position. Depress lock cylinder retaining tab and remove key cylinder (Fig. 62).

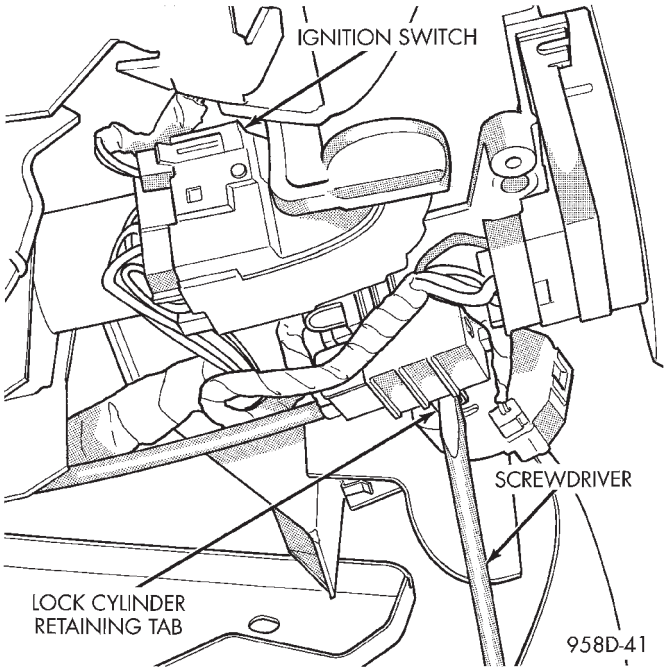

Fig. 62 Lock Cylinder Removal

(13) Disconnect electrical connectors from ignition switch (Fig. 63) and (Fig. 64).

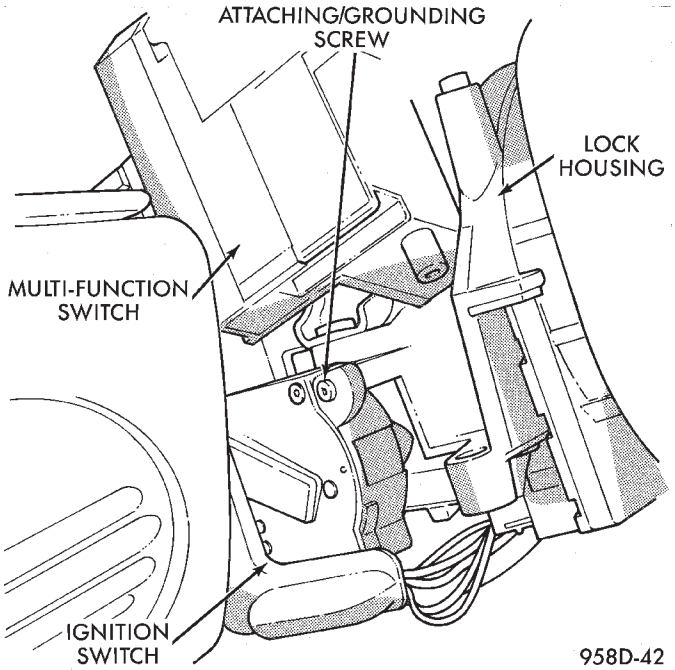

Fig. 63 Ignition Switch

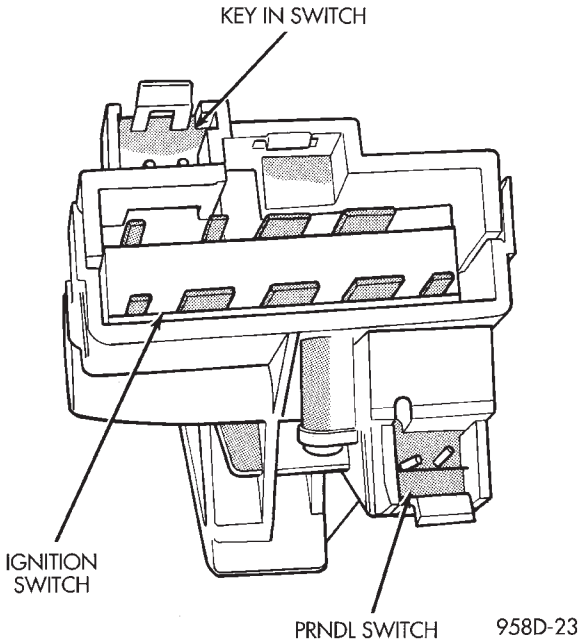

Fig. 64 Ignition Switch Connectors

(14) Remove ignition switch mounting screw (Fig. 63) with a #10 Torx® tamper proof bit.

(15) Depress retaining tabs (Fig. 53) and pull ignition switch from steering column.

REMOVAL AND INSTALLATION (Continued)

INSTALLATION

(1) Ensure the ignition switch is in the RUN position and the actuator shaft in the lock housing is in the RUN position.

(2) Carefully install the ignition switch. The switch will snap over the retaining tabs (Fig. 65). Install mounting screw (Fig. 63).

(3) Install electrical connectors to ignition switch.

(4) Install upper and lower shrouds.

(5) Install key cylinder (cylinder retaining tab will depress only in the RUN position).

(6) Connect negative cable to battery.

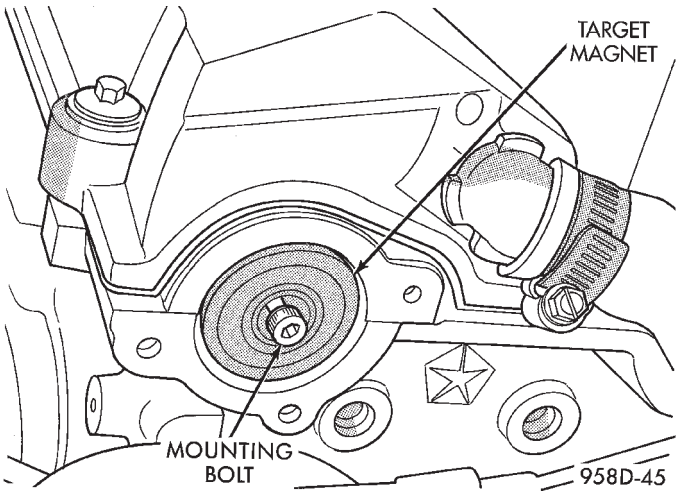

Fig. 65 Ignition Switch Installation

(7) Check for proper operation of ignition switch and key-in warning switch.

LOCK KEY CYLINDER

REMOVAL

(1) Disconnect negative cable from auxillary jumper terminal.

(2) Remove upper steering column shroud.

(3) Pull lower shroud down far enough to access lock cylinder retaining tab.

(4) Place key cylinder in RUN position. Depress retaining tab and remove key cylinder (Fig. 66).

INSTALLATION

(1) Install key in lock cylinder. Turn key to run position (retaining tab on lock cylinder can be depressed).

(2) The shaft at the end of the lock cylinder aligns with the socket in the end of the housing. To align the socket with the lock cylinder, ensure the socket is in the Run position (Fig. 67).

(3) Align the lock cylinder with the grooves in the housing. Slide the lock cylinder into the housing until the tab sticks through the opening in the housing.

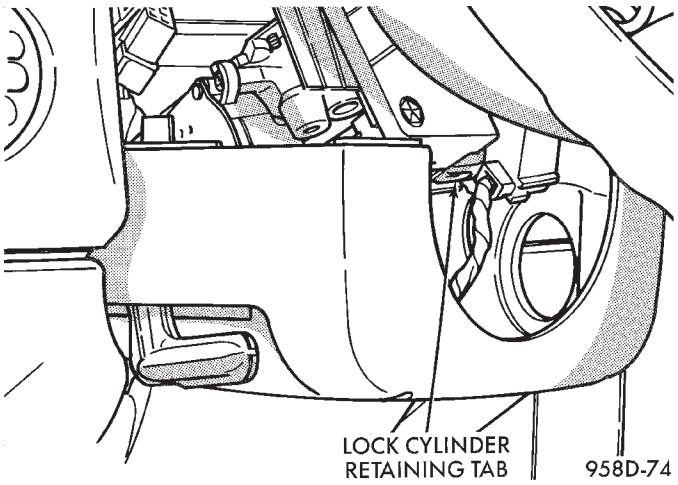

Fig. 66 Lock Cylinder Retaining Tab

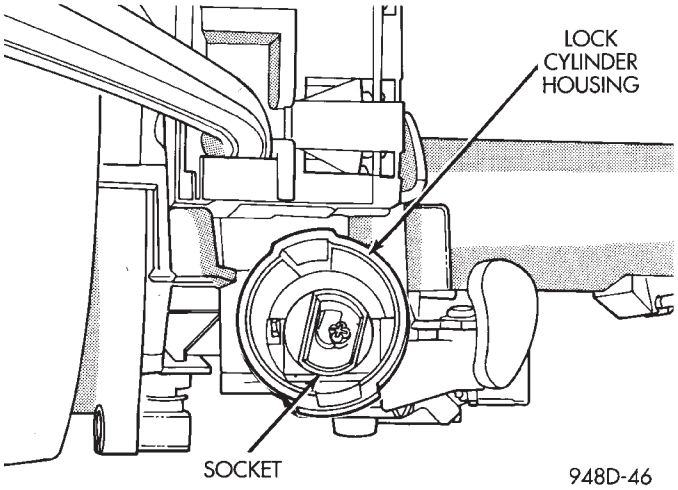

Fig. 67 Socket in Lock Cylinder Housing

(4) Turn the key to the Off position. Remove the key.

(5) Install steering column shrouds.

(6) Connect negative cable to auxillary battery terminal on shock tower.

IGNITION INTERLOCK

Refer to Group 21, Transaxle for Shifter/Ignition Interlock Service.

LOCK CYLINDER HOUSING

Refer to Steering Column in Group 19, Steering, for Lock Cylinder Housing Service.

SPECIFICATIONS

VECI LABEL

If anything differs between the specifications found on the Vehicle Emission Control Information (VECI) label and the following specifications, use specifications on VECI label. The VECI label is located in the engine compartment.

FIRING ORDER

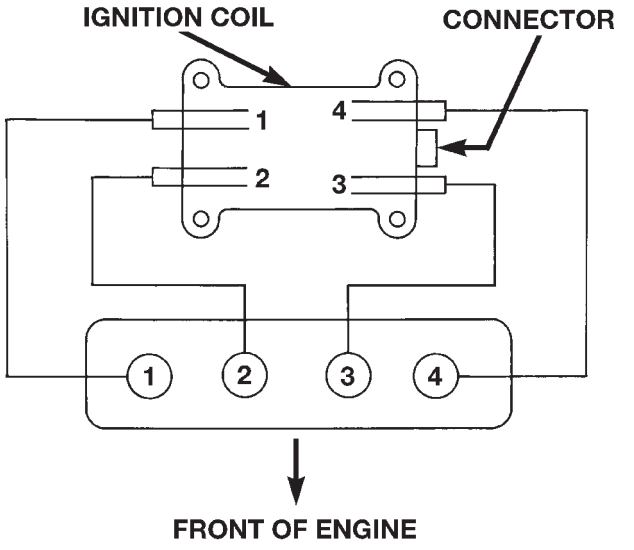

FIRING ORDER 1-3-4-2 8008a549

FIRING ORDER—2.4L

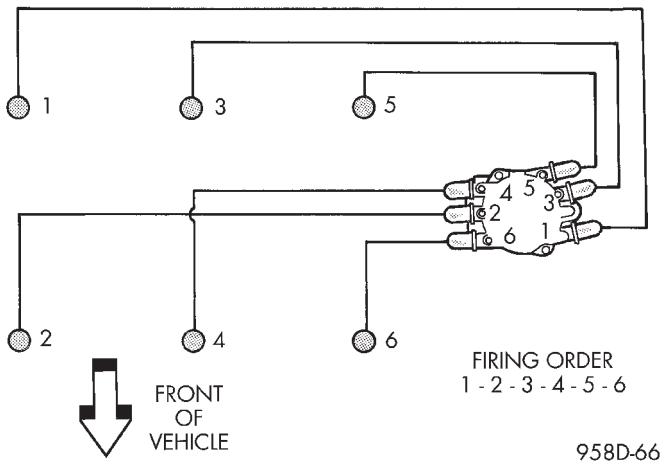

FIRING ORDER—2.5L

TORQUE SPECIFICATION

DESCRIPTION	TORQUE
Air Inlet tube Clamp	3 N·m (25 in. lbs.)
Camshaft Position Sensor Screw	12 N·m (105 in. lbs.)
Coolant Sensor—2.4L	27 N·m (20 ft. lbs.)
Coolant Sensor—2.5L	27 N·m (20 ft. lbs.)
Crankshaft Position Sensor Screw	12 N·m (105 in. lbs.)
Coolant Temp. Sensor	18.6 N·m (165 in. lbs.)
Distributor Holddown Nut—2.5L	13 N·m (9 ft. lbs.)
EGR Tube to Intake	11 N·m (95 in. lbs.)
Ignition Coil to Cyl. Head—2.4L	12 N·m (105 in. lbs.)
IAT Sensor—2.4/2.5L	11.5 N·m (100 in. lbs.)
Knock Sensor	10 N·m (90 in. lbs.)
MAP/IAT Sensor Plastic Manifold	2 N·m (20 in. lbs.)
MAP/IAT Sensor Aluminum Manifold	3 N·m (30 in. lbs.)
MAP Sensor—2.5L	3.4 N·m (30 in. lbs.)
Spark Plugs	28 N·m (20 ft. lbs.)

SPECIFICATIONS (Continued)

SPARK PLUG CABLE RESISTANCE—2.4L

CABLE	RESISTANCE
#1,#4	3500 ohms—4900 ohms
#2,#3	2950 ohms—4100 ohms

SPARK PLUG CABLE RESISTANCE—2.5L

MINIMUM	MAXIMUM
250 Ohms Per Inch	560 Ohms Per Inch
3000 Ohms Per Foot	6700 Ohms Per Foot

SPARK PLUGS

Engine	Spark Plug	Gap	Thread Size
2.4L	RC12YC5	0.048 TO 0.053	14mm (3/4 in.) reach
2.5L	RC10PYP4	0.038 TO 0.043	14mm (3/4 in.) reach

IGNITION COILS

Engines	Coil Manufacture	Primary Resistance at 21°C-27°C (70°F-80°F)	Secondary Resistance at 21°C-27°C (70°F-80°F)
2.0/2.4L	Toyodenso/Diamond	0.51 TO 0.61 Ohms	11,500 to 13,500 Ohms
2.5L	Melco	0.6 TO 0.8 Ohms	12,500 to 18,000 Ohms

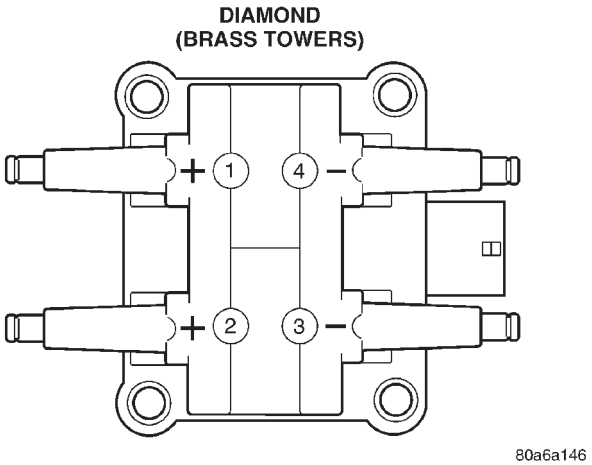

Coil Polarity

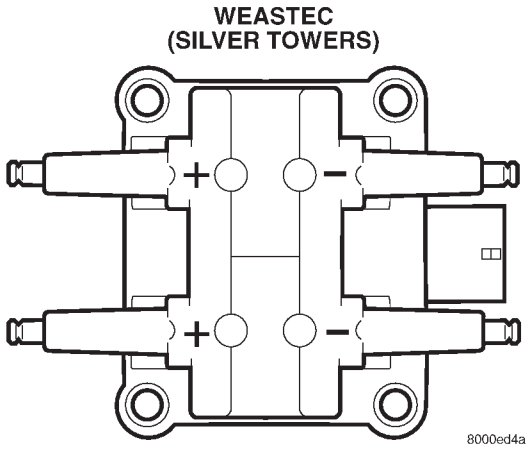

Coil Polarity